California Environmental Protection Agency

Air Resources Board

Vapor Recovery Certification Procedure

CP - 201

Certification Procedure for Vapor Recovery Systems at Gasoline Dispensing Facilities

Alvarez v. Chevron Corp., No. 09-56698 archived on September 9, 2011

Adopted: December 9, 1975
Amended: March 30, 1976
Amended: August 9, 1978
Amended: December 4, 1981
Amended: September 1, 1982
Amended: April 12, 1996
Amended: April 28, 2000
Amended: February 1, 2001
Amended: June 1, 2001
Amended: July 25, 2001
Amended: July 3, 2002
Amended: March 7, 2003
Amended: July 1, 2003
Amended: October 8, 2003
Amended: August 6, 2004
Amended: February 9, 2005

CP-201
TABLE OF CONTENTS

1	GENERAL INFORMATION AND APPLICABILITY	1
1.1	Legislative and Regulatory Requirements of Other State Agencies	1
1.2	Requirement to Comply with All Other Applicable Codes and Regulations	2
2	PERFORMANCE STANDARDS AND SPECIFICATIONS	2
2.1	Performance Standards	2
2.2	Performance Specifications	2
2.3	Innovative Systems	2
2.4	Additional or Amended Performance Standards or Performance Specifications	3
3	PHASE I PERFORMANCE STANDARDS AND SPECIFICATIONS	5
3.1	Phase I Efficiency/Emission Factor	6
3.2	Static Pressure Performance	6
3.3	Phase I Drop-Tubes with Over-Fill Prevention	7
3.4	Phase I Product and Vapor Adaptors	7
3.5	Pressure Vacuum Vent Valves	8
3.6	Spill Containers	8
3.7	Connections and Fittings	8
3.8	Materials Compatibility with Fuel Blends	9
4	PHASE II PERFORMANCE STANDARDS AND SPECIFICATIONS APPLICABLE TO ALL PHASE II VAPOR RECOVERY SYSTEMS	11
4.1	Phase II Emission Factor/Efficiency	12
4.2	Static Pressure Performance	13
4.3	Spillage	14
4.4	Compatibility of Phase II Systems with Vehicles Equipped with ORVR Systems	15
4.5	Compatibility of Phase II Systems with Phase I Systems	15
4.6	Underground Storage Tank Pressure Criteria	15
4.7	Nozzle Criteria	16
4.8	Liquid Retention	17
4.9	Liquid Removal Systems	17
4.10	Nozzle/Dispenser Compatibility	17
4.11	Unihose MPD Configuration	17
4.12	Vapor Return Path	18
4.13	Liquid Condensate Traps	18
4.14	Connections and Fittings	19
5	PHASE II PERFORMANCE STANDARDS AND SPECIFICATIONS APPLICABLE TO BALANCE VAPOR RECOVERY SYSTEMS	20
5.1	Balance Nozzle Criteria	21
5.2	Dynamic Pressure Drop Criteria for Balance Systems	21
6	PHASE II PERFORMANCE STANDARDS AND SPECIFICATIONS APPLICABLE TO ALL ASSIST VAPOR RECOVERY SYSTEMS	22
6.1	Nozzle Criteria	22

Alvarez v. Chevron Corp., No. 09-56698 archived on September 9, 2011

6.2	Air to Liquid Ratio	23
7	PHASE II PERFORMANCE STANDARDS AND SPECIFICATIONS APPLICABLE TO ASSIST SYSTEMS UTILIZING A CENTRAL VACUUM UNIT	23
7.1	Vacuum Levels Generated by the Collection Device	23
7.2	Maximum Number of Refueling Points per Vacuum Device	23
8	PHASE II PERFORMANCE STANDARDS AND SPECIFICATIONS APPLICABLE TO ASSIST SYSTEMS UTILIZING A DESTRUCTIVE OR NON-DESTRUCTIVE PROCESSOR	24
8.1	Processor Emission Factor	25
8.2	Hazardous Air Pollutants from Destructive Processors	25
8.3	Maximum Hydrocarbon Feedrate to Processor	25
8.4	Typical Load on the Processor	25
9	ADDITIONAL REQUIREMENTS OF CERTIFICATION	25
9.1	Financial Responsibility	25
9.2	Warranty	26
9.3	Installation, Operation and Maintenance of the System	26
9.4	Identification of System Components	27
10	IN-STATION DIAGNOSTIC SYSTEMS	27
11	APPLICATION PROCESS	34
11.1	Description of Vapor Recovery System	36
11.2	Description of In-Station Diagnostics	36
11.3	Compatibility	37
11.4	Reliability of the System	38
11.5	Installation and Maintenance of the System	38
11.6	Evidence of Financial Responsibility	39
11.7	Warranty	39
11.8	Test Station	39
11.9	Notification of System Certification Holder	39
11.10	Other Information	40
12	ENGINEERING EVALUATION OF VAPOR RECOVERY SYSTEMS	40
12.1	Performance Standards and Specifications	40
12.2	Bench and Operational Testing Results	40
12.3	Evaluation of System Concept	40
12.4	Materials Specifications and Compatibility with Fuel Formulations	40
12.5	Installation and Maintenance Manuals	41
12.6	Failure Mode Procedures and Test Results	41
13	VAPOR RECOVERY SYSTEM CERTIFICATION TESTING	41
13.1	Test Site for Field Testing of Vapor Recovery Systems	41
13.2	Bench Testing of Components	42
13.3	Operational test of at Least 180 Days	43
13.4	Failure Mode Testing	44
13.5	Efficiency and/or Emission Factor Test	44
13.6	Vehicle Matrix	45

Alvarez v. Chevron Corp., No. 09-56698 archived on September 9, 2011

14	ALTERNATE TEST PROCEDURES AND INSPECTION PROCEDURES	46
14.1	Alternate Test Procedures for Certification Testing	46
14.2	Request for Approval of Alternate Test Procedure	46
14.3	Response to Request	46
14.4	Testing of Alternate Test Procedures	46
14.5	Documentation of Alternate Test Procedures	47
14.6	Inspection Procedures	47
15	CERTIFICATION OF SYSTEMS	47
15.1	One Vapor Recovery System per UST System	47
15.2	Certification Not Transferable	47
16	CERTIFICATION OF NON-SYSTEM-SPECIFIC COMPONENTS	48
16.1	Identification of Components	48
16.2	Properties of Non-System-Specific Components	48
16.3	Testing Requirements for System-Specific Components	48
16.4	Testing Requirements for Non-System-Specific Components	49
17	DOCUMENTATION OF CERTIFICATION	50
17.1	Executive Order	50
17.2	Summary of Certification Process	51
18	DURATION AND CONDITIONS OF CERTIFICATION	51
18.1	Duration of System Certification	51
18.2	Duration of Component Certification	51
18.3	Performance Monitoring	51
18.4	Modification of Expiration Date	51
19	CERTIFICATIONS THAT HAVE BEEN TERMINATED	52
19.1	Replacement of Components or Parts of a System with a Terminated Cert.	53
19.2	Installation of Systems with Terminated Certifications	53

Alvarez v. Chevron Corp., No. 09-56698 archived on September 9, 2011

LIST OF TABLES

TABLE	TITLE	
2-1	Effective and Operative Dates for Performance Standards and Specifications	4
3-1	Phase I Performance Standards and Specifications Applicable to All Vapor Recovery Systems	5
4-1	Phase II Performance Standards and Specifications Applicable to All Phase II Vapor Recovery Systems	11
5-1	Phase II Performance Standards and Specifications Applicable to Phase II Balance Vapor Recovery Systems	20
6-1	Phase II Performance Standards and Specifications Applicable to All Phase II Vacuum Assist Systems	22
7-1	Phase II Performance Standards and Specifications Applicable to All Phase II Assist Systems Utilizing a Central Vacuum Unit	23
8-1	Phase II Performance Standards and Specifications Applicable to All Phase II Assist Systems Utilizing a Destructive Processor	24
8-2	Phase II Performance Standards and Specifications Applicable to All Phase II Assist Systems Utilizing a Non-Destructive Processor	24
11-1	Application for Certification Time Requirements For the Certification Application Process.....	35
16-1	System Specific Components	49
16-2	Non-System Specific Components	50
18-1	CARB Actions Regarding Expiring Certifications	52

Alvarez v. Chevron Corp., No. 09-56698 archived on September 07, 2011

LIST OF FIGURES

FIGURE	TITLE	
3A	Phase I Product Adaptor Cam and Groove Standard	10
3B	Phase I Vapor Recovery Adaptor Cam and Groove Standard.....	10

California Environmental Protection Agency
Air Resources Board

Vapor Recovery Certification Procedure

CP-201

Certification Procedure for Vapor Recovery Systems at Gasoline Dispensing Facilities

A set of definitions common to all Certification and Test Procedures are in:

D-200 Definitions for Vapor Recovery Procedures

For the purpose of this procedure, the term "CARB" refers to the California Air Resources Board, and the term "Executive Officer" refers to the CARB Executive Officer, or his or her authorized representative or designate.

1. GENERAL INFORMATION AND APPLICABILITY

Alvarez v. Chevron Corp., No. 09-56698 archived on September 9, 2011

This document describes the procedure for evaluating and certifying Phase I and Phase II vapor recovery systems, and components, used at Gasoline Dispensing Facilities (GDF). A CARB Executive Order certifying the system shall be issued only after all of the applicable certification requirements have been successfully completed.

This Certification Procedure, CP-201, is adopted pursuant to Section 41954 of the California Health and Safety Code (CH&SC) and is applicable to vapor recovery systems installed at gasoline dispensing facilities for controlling gasoline vapors emitted during the fueling of storage tanks (Phase I) and the refueling of vehicle fuel tanks (Phase II). Vapor recovery systems are complete systems and shall include all associated dispensers, piping, nozzles, couplers, processing units, underground tanks and any other equipment or components necessary for the control of gasoline vapors during Phase I or Phase II refueling operations at GDF.

1.1 Legislative and Regulatory Requirements of Other State Agencies

As required pursuant to Sections 41955 and 41957 of the CH&SC, the Executive Officer shall coordinate this certification procedure with:

1.1.1 Department of Food and Agriculture,
Division of Measurement Standards (DMS)

1.1.2 Department of Forestry and Fire Protection,
Office of the State Fire Marshall (SFM)

1.1.3 Department of Industrial Relations,
Division of Occupational Safety and Health (DOSH)

Prior to certification of the vapor recovery system by the Executive Officer, the applicant shall submit plans and specifications for the system to each of these agencies. Certification testing by these agencies may be conducted concurrently with CARB certification testing; however, the approval of the SFM, DMS and DOSH shall be a precondition to certification by CARB. The applicant is responsible for providing documentation of these approvals to CARB.

1.2 Requirement to Comply with All Other Applicable Codes and Regulations

Certification of a system by the Executive Officer does not exempt the system from compliance with other applicable codes and regulations such as state fire codes, weights and measures regulations, and safety codes and regulations.

2. GENERAL PERFORMANCE STANDARDS AND SPECIFICATIONS

2.1 Performance Standards

A performance standard defines the minimum performance requirements for certification of any system, including associated components. Ongoing compliance with all applicable performance standards shall be demonstrated throughout certification testing. Systems and components shall comply, throughout the warranty period, with the applicable performance standards.

Alvarez v. Chevron Corp., No. 09-56698 archived on September 9, 2011

2.2 Performance Specifications

A performance specification is an engineering requirement that relates to the proper operation of a specific system or component thereof. Performance specifications shall be identified in the application for certification. Ongoing compliance with the minimum level of performance specifications identified herein shall be demonstrated throughout certification testing and specified in the certification Executive Orders. Any applicant may request certification to a performance specification that is more stringent than the minimum performance standard or specification. The performance specification to which a system or component is certified shall be the minimum allowable level of performance the component is required to meet throughout the warranty period. Typical performance specifications include, but are not limited to, pressure drop and pressure integrity.

2.3 Innovative System

The innovative system concept provides flexibility in the design of vapor recovery systems. A vapor recovery system that fails to comply with an identified performance standard or specification may qualify for consideration as an innovative system, provided that the system meets the primary emission factor/efficiency, complies with all other applicable requirements of certification, and the Executive Officer determines that the emission benefits of the innovation are greater than the consequences of failing to meet the identified standard or specification.

2.4 Additional or Amended Performance Standards or Performance Specifications

Whenever these Certification Procedures are amended to include additional (or modify existing) performance standards or performance specifications, any system that is certified as of the effective date of more stringent standards or specifications shall remain certified until the operative date.

2.4.1 The effective date of adoption for all performance standards and specifications contained herein, except as otherwise specified in Table 2-1, shall be April 1, 2001.

2.4.2 The operative date shall be the effective date of adoption of the more stringent performance standards or specifications, except as otherwise specified below. Certifications shall expire on the operative date of amended or additional performance standards or specifications unless the Executive Officer determines that the system meets the amended or additional performance standards or specifications. Upon the operative date of amended or additional performance standards or specifications, only systems complying with the more stringent performance standards or specifications may be installed. Systems installed prior to this date shall be permitted to remain in use provided they comply with the conditions in Section 19 of this procedure.

Alvarez v. Cimarron Corp., No. 09-56608 archived on September 9, 2011

2.4.3 In determining whether a previously certified system conforms with any additional performance standards, specifications or other requirements adopted subsequent to certification of the system, the Executive Officer may consider any appropriate information, including data obtained in the previous certification testing of the system in lieu of new testing.

2.4.4 Gasoline Dispensing Facilities in districts that ARB determines are in attainment with the state standard for Ozone are exempted from the Enhanced Vapor Recovery performance standards and specifications set forth in sections 3 through 8, and 10, inclusive, with the exception of the requirement for compatibility with vehicles that are equipped with Onboard Refueling Vapor Recovery (ORVR) systems as specified in subsections 4.1, 4.4, and 13.4.1. New GDFs, and those undergoing major modifications, are not exempt. If exempt facilities become subject to additional standards due to a subsequent reclassification of their district from attainment to non-attainment, the facilities will have four years to comply.

2.4.5 The gasoline dispensing facility's gasoline throughput for calendar year 2003 shall be used for determining compliance with the Onboard Refueling Vapor Recovery (ORVR) requirements in Table 2-1.

Table 2-1
Effective and Operative Dates for
Performance Standards and Specifications

Performance Type	Requirement	Sec.	Effective Date	Operative Date
All Phase I Standards and Specifications	As specified in Table 3-1	3	April 1, 2001	July 1, 2001
ORVR Compatibility for GDF > 2.0 million gal/yr throughput[1]	As specified in section 2.4.5 and section 4.4	4.4	September 1, 2001	April 1, 2003
ORVR Compatibility for GDF ≥ 1.0 million gal/yr throughput[1]	As specified in section 2.4.5 and section 4.4	4.4	January 1, 2002	April 1, 2003
ORVR Compatibility for GDF < 1.0 million gal/yr throughput[1]	As specified in section 2.4.5 and section 4.4	4.4	March 1, 2002	April 1, 2003
Nozzle Criteria	Post-Refueling Drips ≤ 3 drop/refueling	4.7	January 1, 2005	January 1, 2005
Liquid Retention	≤ 350 ml/1,000 gals.	4.8	April 1, 2001	July 1, 2001
Liquid Retention Nozzle Spitting	≤ 100 ml/1,000 gals. ≤ 1.0 ml /nozzle/fueling	4.8	January 1, 2005	January 1, 2005
Spillage (including drips from spout)	≤ 0.24 pounds/1,000 gallons	4.3	January 1, 2005	January 1, 2005
For GDF > 1.8 mil. gal/yr.	ISD Requirements	10	April 1, 2005	April 1, 2005
For GDF > 600,000 gal/yr.[2]	ISD Requirements	10.1	April 1, 2006	April 1,2006
Unihose	One Hose/Nozzle per Dispenser Side	4.11	Not applicable	April 1, 2003
All other Phase II Standards and Specifications	As specified in Tables 4-1 through 8-2.	4,5, 6,7,8	January 1, 2005	January 1, 2005

Alvarez v. Chevron Corp., No. 09-06698 archived on September 9, 2011

[1] Effective January 1, 2001, state law requires the certification of only those systems that are ORVR compatible (Health and Safety Code section 41954, as amended by Chapter 729, Statutes of 2000; Senate Bill 1300).
[2] GDF ≤ 600,000 gal/yr are exempted from ISD requirements.

3. PHASE I PERFORMANCE STANDARDS AND SPECIFICATIONS

Table 3-1 summarizes the Phase I Performance Standards and Specifications applicable to **all Phase I and Phase II** vapor recovery systems.

Table 3-1
Phase I Performance Standards and Specifications
APPLICABLE TO ALL VAPOR RECOVERY SYSTEMS

Performance Type	Requirement	Sec.	Std. Spec.	Test Procedure
Phase I Efficiency	≥ 98.0%	3.1	Std.	TP-201.1 TP-201.1A
Phase I Emission Factor	HC ≤ 0.15 pounds/1,000 gallons	3.1	Std.	TP-201.1A
Static Pressure Performance	In accordance with section 3.2	3.2	Std.	TP-201.3
Pressure Integrity of Drop-Tube with Overfill Prevention	≤ 0.17 CFH at 2.0 inches H_2O	3.3	Spec.	TP-201.1D
Phase I Product and Vapor Adaptor/Delivery Elbow Connections	Rotatable 360°, or equivalent	3.4	Spec.	TP-201.1B and Eng. Eval.
Phase I Product Adaptor Cam and Groove	As shown in Figure 3A	3.4	Spec.	Micrometer
Phase I Vapor Recovery Adaptor Cam and Groove	CID A-A-59326 (As shown in Figure 3B)	3.4	Spec.	Micrometer
Phase I Vapor Adaptor	Poppetted	3.4	Spec.	Testing and Eng. Eval.
Phase I Vapor Adaptor	No Indication of Leaks Using Liquid Leak Detection Solution (LDS) or Bagging	3.4	Spec.	LDS or Bagging
Phase I Vapor Adaptor Dynamic Pressure Drop	Pressure Drop at 300, 400, & 500 gpm Specification to be Established During Certification Process	3.4	Spec.	Eng. Eval.
Phase I Product and Vapor Adaptors	≤ 108 pound-inch (9 pound-foot) Static Torque	3.4	Spec.	TP-201.1B
UST Vent Pipe Pressure/Vacuum Valves	Pressure Settings 3.0 ± 0.5 inches H_2O Positive Pressure 8.0 ± 2.0 inches H_2O Negative Pressure Leakrate at +2.0 inches H_2O ≤ 0.17 CFH Leakrate at -4.0 inches H_2O ≤ 0.21 CFH Total Additive Leakrate from All P/V Valves ≤ 0.17 CFH at 2.0 inches H_2O	3.5	Spec.	TP-201.1E

Alvarez v. Chevron Corp., No. 09-56698 archived on September 9, 2011

Table 3-1 (continued)
Phase I Performance Standards and Specifications
APPLICABLE TO ALL VAPOR RECOVERY SYSTEMS

Performance Type	Requirement	Sec.	Std. Spec.	Test Procedure
Spill Container Drain Valves	Leakrate ≤ 0.17 CFH at +2.0 inches H_2O	3.6	Spec.	TP-201.2B TP-201.1C TP-201.1D
Vapor Connectors and Fittings	No Indication of Leaks Using Liquid Leak Detection Solution (LDS) or Bagging	3.7	Spec.	LDS or Bagging
Compatibility with Fuel Blends	Materials shall be compatible with approved fuel blends	3.8	Spec.	Testing and Eng. Eval.

3.1 Phase I Efficiency/Emission Factor

3.1.1 The minimum volumetric efficiency of Phase I systems shall be 98.0%. This shall be determined in accordance with TP-201.1 (Volumetric Efficiency of Phase I Systems at Dispensing Facilities).

3.1.2 The hydrocarbon emission factor for systems with processors shall not exceed 0.15 pounds per 1,000 gallons dispensed. This shall be determined in accordance with TP-201.1A (Emission Factor for Phase I Systems at Dispensing Facilities).

Alvarez v. Chevron Corp., No. 09-336598 archived on September 9, 2011

3.2 Static Pressure Performance

The static pressure performance of Phase I vapor recovery systems not associated with Phase II systems shall be determined in accordance with TP-201.3 (Determination of 2 Inch WC Static Pressure Performance of Vapor Recovery Systems of Dispensing Facilities).

3.2.1 All Phase I systems shall be capable of meeting the performance standard in accordance with Equation 3-1.

3.2.2 The minimum allowable five-minute final pressure, with an initial pressure of two (2.0) inches H_2O, shall be calculated as follows:

[Equation 3-1]

$$P_f = 2e^{\frac{-500.887}{V}}$$

Where:

P_f = The minimum allowable five-minute final pressure, inches H_2O

V = The total ullage affected by the test, gallons

e = A dimensionless constant approximately equal to 2.718

2 = The initial starting pressure, inches H_2O

3.3 Phase I Drop-Tubes with Over-Fill Prevention Devices

Phase I drop-tube over-fill prevention devices shall have a leak rate not to exceed 0.17 cubic feet per hour (0.17 CFH) at a pressure of two inches water column (2.0" H_2O). The leak rate shall be determined in accordance with TP-201.1D (Leak Rate of Drop Tube Overfill Prevention Devices and Spill Container Drain Valves). Drop-tubes that do not have an over-fill prevention device shall not leak.

3.4 Phase I Vapor Recovery and Product Adaptors

3.4.1 The vapor recovery and product adaptors shall not leak. The vapor recovery and product adaptors, and the method of connection with the delivery elbow, shall be designed so as to prevent the over-tightening or loosening of fittings during normal delivery operations. This may be accomplished by installing a swivel connection on either the storage tank (rotatable adaptor) or delivery elbow side of the equipment, or by anchoring the product and vapor adaptors in such a way that they are not rotated during deliveries, provided the anchoring mechanism does not contribute undue stress to other tank connections. If a delivery elbow with a swivel connection is the preferred method, only cargo tank trucks with those elbows shall deliver to the facility. The adaptors at such a facility shall be incompatible with a delivery elbow that does not have a swivel.

Alvarez v. Chevron Corp., No. 09-55698 archived on September 9, 2011

3.4.2 Phase I product adaptors shall be manufactured in accordance with the cam and groove specification as shown in Figure 3A. Phase I vapor recovery adaptors shall be manufactured in accordance with the cam and groove specification as specified in the Commercial Item Description CID A-A-59326 (shown in Figure 3B). These specifications shall be applicable only to new adaptors and shall not be applied to in-use adaptors.

3.4.3 Phase I vapor recovery adaptors shall have a poppet. The poppet shall not leak when closed. The absence of vapor leaks may be verified by the use of commercial liquid leak detection solution, or by bagging, when the vapor containment space of the underground storage tank is subjected to a non-zero gauge pressure. (Note: leak detection solution will detect leaks only when positive gauge pressure exists.)

3.4.4 The Phase I vapor adaptor shall have performance specifications for the maximum pressure drop at 300, 400 and 500 gallons per minute (gpm) (± 50. gpm). The specifications shall be documented by the applicant and verified during the certification process.

3.4.5 The static torque of product and vapor recovery adaptors shall not exceed 108 pound-inch (9 pound-foot) when measured in accordance with TP-201.1B.

3.5 Pressure/Vacuum Vent Valves

The Executive Officer shall certify only those vapor recovery systems equipped with a pressure/vacuum (P/V) valve(s) on the underground storage tank vent pipe(s). Compliance with the P/V valve requirements set forth below shall be determined by TP-201.1E, (Leak Rate and Cracking Pressure of Pressure/Vacuum Vent Valves).

3.5.1 The pressure settings for P/V valves shall be:
Positive pressure setting of 3.0 ± 0.5 inches H_2O.
Negative pressure setting of 8.0 ± 2.0 inches H_2O.

3.5.2 The leak rates for P/V valves, including connections, shall be less than or equal to:

0.17 CFH at +2.0 inches H_2O.
0.21 CFH at -4.0 inches H_2O.

3.5.3 The total additive leakrate of all P/V valves installed on any vapor recovery system, including connections, shall not exceed 0.17 CFH at 2.0 inches H_2O. This may be accomplished by manifolding the tank vent pipes into a single P/V valve or, alternatively, by choosing P/V valves certified to a more restrictive performance specification.

Alvarez v. Chevron Corp., No. 09-56698 archived on September 9, 2011

3.6 Spill Containers

3.6.1 Phase I spill container drain valves shall not exceed a leak rate of 0.17 CFH at 2.0 inches H_2O. Spill containers with cover-actuated drain valves shall be tested both with the lid installed and with the lid removed. The leak rate shall be determined in accordance with TP-201.2B (Pressure Integrity of Vapor Recovery Equipment). Phase I configurations installed so that liquid drained through the drain valve drains directly into the drop tube rather than the UST ullage shall be tested in accordance with TP-201.1C (Leak Rate of Drop Tube/Drain Valve Assembly) or TP-201.1D (Leak Rate of Drop Tube Overfill Prevention Device and Spill Container Drain Valves), whichever is applicable.

3.6.2 Drain valves shall not be allowed in spill containers used exclusively for Phase I vapor connections unless required by other applicable regulations.

3.6.3 Spill Containers shall be maintained in accordance with all applicable requirements.

3.7 Vapor Connections and Fittings

All vapor connections and fittings not specifically certified with an allowable leakrate shall not leak. The absence of vapor leaks may be verified by the use of commercial

liquid leak detection solution, or by bagging individual components, when the vapor containment space of the underground storage tank is subjected to a non-zero gauge pressure. (Note: leak detection solution will detect leaks only when positive gauge pressure exists.) The absence of liquid leaks may be verified by visual inspection for seepage or drips.

3.8 Materials Compatibility with Fuel Blends

Vapor recovery systems and components shall be compatible with any and all fuel blends in common use in California, including seasonal changes, and approved for use as specified in title 13, CCR, section 2260 et seq. Applicants for certification may request limited certification for use with only specified fuel blends. Such fuel-specific certifications shall clearly specify the limits and restrictions of the certification.

Alvarez v. Chevron Corp., No. 09-56698 archived on September 9, 2011

Figure 3A
Phase I Product Adaptor Cam and Groove Specification

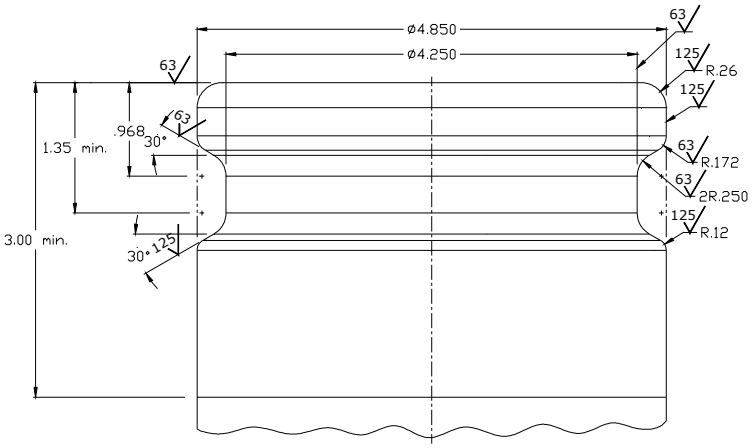

UNLESS OTHERWISE SPECIFIED
DIMENSIONS ARE IN INCHES
TOLERANCES ON DECIMALS
.XXX ± .005
.XX ± .01
ANGLES ± 0.5°

Alvarez v. Chevron Corp., No. 09-5868, archived on September 9, 2011

Figure 3B
Phase I Vapor Recovery Adaptor Cam and Groove Specification

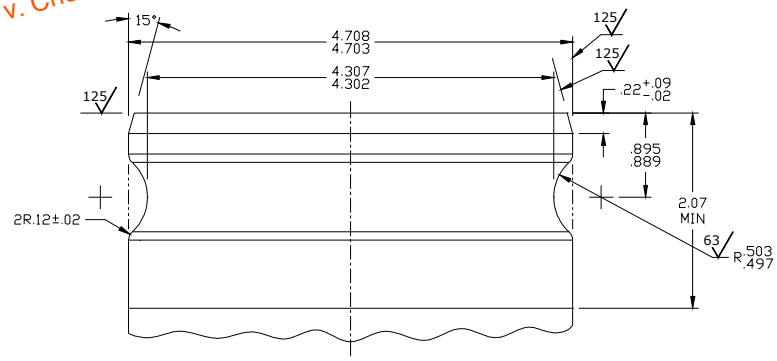

UNLESS OTHERWISE SPECIFIED
DIMENSIONS ARE IN INCHES
TOLERANCES ON DECIMALS
.XXX ± .005
.XX ± .02
ANGLES ± 0.5°

BASED ON
COMMERCIAL ITEM DESCRIPTION
CID A-A-59326
COUPLING HALF, MALE

4. PHASE II PERFORMANCE STANDARDS AND SPECIFICATIONS APPLICABLE TO ALL PHASE II VAPOR RECOVERY SYSTEMS

Table 4-1 summarizes the Phase II Performance Standards and Specifications applicable to all Phase II vapor recovery systems. Phase II vapor recovery systems shall be used only in facilities equipped with a certified Phase I system. Phase II systems are subject to all of the standards and specifications in Section 3, as well as those in any other applicable section.

Table 4-1
Phase II Performance Standards and Specifications
APPLICABLE TO ALL PHASE II VAPOR RECOVERY SYSTEMS

Performance Type	Requirement	Sec.	Std Spec.	Test Procedure
Phase II Emission Factor Includes: Refueling and Vent Emissions Pressure-Related Fugitives	Summer Fuel: 95% Efficiency and HC ≤ 0.38 pounds/1,000 gallons Winter Fuel: 95% Efficiency or HC ≤ 0.38 pounds/1,000 gallons	4.1	Std.	TP-201.2 TP-201.2A TP-201.2F
Static Pressure Performance	In accordance with Section 4.2	4.2	Std.	TP-201.3
Spillage Including Drips from Spout	≤ 0.24 pounds/1,000 gallons	4.3	Std.	TP-201.2C
ORVR Compatibility	Interaction when Refueling ORVR Vehicles Shall Meet the applicable Efficiency or Emission Standard, Including ORVR Penetrations to 80%	4.1 4.4	Std.	Approved Procedure Developed by Mfg.
Phase II Compatibility with Phase I Systems	Phase II System Shall Not Cause Excess Emissions From Phase I Operations	4.5	Spec.	Testing and Eng. Eval.
UST Pressure Criteria (30 day rolling average)	Daily Average Pressure ≤ +0.25 in. H_2O Daily High Pressure ≤ +1.50 in. H_2O	4.6	Spec.	TP-201.7
Nozzle Criteria Each Phase II Nozzle Shall:	Post-Refueling Drips ≤ 3 Drops/Refueling Have an OD ≤ 0.840 inches for 2.5 inches Be capable of fueling any vehicle that can be fueled with a conventional nozzle	4.7	Spec.	TP-201.2D Engineering Evaluation
Liquid Retention Nozzle "Spitting"	≤ 100 ml/1,000 gallons ≤ 1.0 ml per nozzle per test	4.8	Std.	TP-201.2E
Liquid Removal Systems	Capable of Removing 5 ml/ gal. (average)	4.9	Std.	TP-201.6

Alvarez v. Chevron Corp., No. 09-56698 archived on September 9, 2011

Table 4-1 (continued)
Phase II Performance Standards and Specifications
APPLICABLE TO ALL PHASE II VAPOR RECOVERY SYSTEMS

Performance Type	Requirement	Sec.	Std Spec.	Test Procedure
Nozzle/Dispenser Compatibility	Vapor Check Valve Closed When Hung Hold-open Latch Disengaged When Hung	4.10	Spec.	Testing and Eng. Eval.
Unihose MPD Configuration	One Hose/Nozzle per Dispenser Side	4.11	Spec.	Testing and Eng. Eval.
Phase II Vapor Riser	Minimum 1" Nominal ID	4.12	Spec.	Testing and Eng. Eval.
Vapor Return Piping	No liquid or fixed blockage Minimum 3" Nominal ID after first manifold Recommended slope 1/4" per foot Minimum slope 1/8" per foot Rigid piping, or equivalent	4.12	Spec.	Testing and Eng. Eval. TP-201.2G
Vapor Return Pipe Runs	The Maximum Allowable Lengths of Pipe Runs Shall Be Established During the Certification Process	4.12	Spec.	Testing and Eng. Eval.
Liquid Condensate Traps	Shall have Automatic Evacuation System	4.13	Spec.	Testing and Eng. Eval.
Connectors and Fittings	No Indication of Vapor Leaks With Liquid Leak Detection Solution (LDS) or Bagging	4.14	Spec.	LDS or Bagging

Alvarez v. Chevron Corp., No. 09-56698 archived on September 9, 2011

4.1 Phase II Emission Factor/Efficiency

4.1.1 The Hydrocarbon emission factor and/or efficiency for Phase II vapor recovery systems shall be determined as follows:

When testing conducted with gasoline meeting the requirements for summer fuel:
95% Efficiency and
Hydrocarbon emission factor not to exceed 0.38 pounds/1,000 gallons.

When testing conducted with gasoline meeting the requirements for winter fuel:
95% Efficiency or
Hydrocarbon emission factor not to exceed 0.38 pounds/1,000 gallons.

The emission factor shall demonstrate compliance with the standard when calculated for each of these test populations:
The entire population of 200 vehicles as defined in TP-201.2A
The vehicles defined as "ORVR vehicles" and
The vehicles defined as "non-ORVR vehicles."

The efficiency shall demonstrate compliance with the standard when calculated for the vehicles identified as "non-ORVR."

4.1.2 The emission factor and/or efficiency shall be determined in accordance with TP-201.2 (Efficiency and Emission Factor for Phase II Systems) and shall include all refueling emissions, underground storage tank vent emissions and pressure-related fugitive emissions. Pressure-related fugitive emissions shall be determined in accordance with TP-201.2F (Pressure-Related Fugitive Emissions). Phase II systems that have underground storage tank (UST) pressures sufficient to cause potential fugitive emissions that exceed fifty percent (50%) of the maximum allowable emission factor shall not be certified.

4.2 Static Pressure Performance

The static pressure performance of Phase II systems, including the associated Phase I system, shall be determined in accordance with TP-201.3 (Determination of 2 Inch WC Static Pressure Performance of Vapor Recovery Systems of Dispensing Facilities).

4.2.1 All Phase II vapor recovery systems shall be capable of meeting the performance standard in accordance with Equation 4-1 or 4-2.

4.2.2 For Phase II Balance Systems, the minimum allowable five-minute final pressure, with an initial pressure of two (2.0) inches H_2O, shall be calculated as follows:

Alvarez v. Chevron Corp.; NDCal 09-5696 archived on September 9, 2011

[Equation 4-1]

$$P_f = 2e^{\frac{-760.490}{V}} \quad \text{if N = 1-6}$$

$$P_f = 2e^{\frac{-792.196}{V}} \quad \text{if N = 7-12}$$

$$P_f = 2e^{\frac{-824.023}{V}} \quad \text{if N = 13-18}$$

$$P_f = 2e^{\frac{-855.974}{V}} \quad \text{if N = 19-24}$$

$$P_f = 2e^{\frac{-888.047}{V}} \quad \text{if N > 24}$$

Where:

N = The number of affected nozzles. For manifolded systems, N equals the total number of nozzles. For dedicated plumbing configurations, N equals the number of nozzles serviced by the tank being tested.

P_f = The minimum allowable five-minute final pressure, inches H_2O

V = The total ullage affected by the test, gallons

e = A dimensionless constant approximately equal to 2.718

2 = The initial starting pressure, inches H_2O

4.2.3 For Phase II Vacuum Assist Systems, the minimum allowable five-minute final pressure, with an initial pressure of two (2.0) inches H_2O, shall be calculated as follows:

[Equation 4-2]

$$P_f = 2e^{\frac{-500.887}{V}} \quad \text{if N = 1-6}$$

$$P_f = 2e^{\frac{-531.614}{V}} \quad \text{if N = 7-12}$$

$$P_f = 2e^{\frac{-562.455}{V}} \quad \text{if N = 13-18}$$

$$P_f = 2e^{\frac{-593.412}{V}} \quad \text{if N = 19-24}$$

$$P_f = 2e^{\frac{-624.483}{V}} \quad \text{if N > 24}$$

Where:

N = The number of affected nozzles. For manifolded systems, N equals the total number of nozzles. For dedicated plumbing configurations, N equals the number of nozzles serviced by the tank being tested.

P_f = The minimum allowable five-minute final pressure, inches H_2O

V = The total ullage affected by the test, gallons

e = A dimensionless constant approximately equal to 2.718

2 = The initial starting pressure, inches H_2O

Alvarez v. Chevron Corp., No. 09-56696 archived on September 9, 2011

4.2.4 Under no circumstances shall Phase II components be partially or completely immersed in water to check for pressure integrity.

4.3 Spillage

The Executive Officer shall not certify vapor recovery systems that cause excessive spillage.

4.3.1 Spillage shall be determined in accordance with TP-201.2C (Spillage from Phase II Systems). The emission factor for spillage shall not exceed 0.24 pounds/1000 gallons dispensed, for each of the following three categories:

All refueling events;

Refueling operations terminated before activation of the primary shutoff; and

Refueling events terminated by activation of the primary shutoff.

4.3.2 The number of self-service refueling operations observed during certification testing of any system for spillage shall be not less than:

1,000 refueling operations [not including topoffs]; and

400 fill-ups [terminated by full tank shut-off, not including topoffs].

4.3.3 Increased spillage resulting from one top-off following the first activation of the automatic (primary) shutoff mechanism shall be subjected to failure mode testing. Nozzles that result in excessive spillage following one top off shall not be certified.

4.4 Compatibility of Phase II Systems with Vehicles Equipped with ORVR Systems

4.4.1 When refueling vehicles equipped with onboard refueling vapor recovery (ORVR), the Phase II system shall meet the criteria as specified in section 4.1.

4.4.2 Compatibility shall be demonstrated for typical and worst case situations and vehicle populations, up to and including 80% ORVR-equipped vehicles. Actual vehicles shall be used whenever feasible. Simulations may be proposed for specific demonstrations. Any ORVR simulation protocols shall be approved by the Executive Officer prior to conducting the test.

4.4.3 The system manufacturer shall be responsible for developing a procedure by which compatibility can be demonstrated. This procedure is subject to engineering evaluation by the Executive Officer; if it is deemed inadequate and/or unusable, the certification application shall be deemed unacceptable.

Alvarez v. Chevron Corp., No. 09-56598 archived on September 9, 2011

4.5 Compatibility of Phase II Systems with Phase I Systems

4.5.1 Phase II vapor recovery systems shall not cause excess emissions from Phase I systems. Emissions resulting from Phase I operations which are attributable to the design or anticipated operation of the Phase II system shall not be discounted when determining the adequacy of the entire vapor recovery system.

4.5.2 Applicants for certification may, as a performance specification, limit the type of equipment with which their system is compatible. Any such specification shall become a condition of certification.

4.6 Underground Storage Tank Pressure Criteria

Phase II systems that have underground storage tank (UST) pressures sufficient to cause potential fugitive emissions that exceed fifty percent (50%) of the maximum allowable emission factor shall not be certified. In addition, the following criteria shall apply to all Phase II systems.

4.6.1 The vapor recovery system pressure data shall be evaluated so that periods during which system pressure changes directly attributable to Phase I equipment or operations that do not comply with Sections 4.1.2 and/or 4.1.3

of CP-204 are not used to determine failure of the Phase II system to meet the system pressure criteria.

4.6.2 If the vapor recovery system pressure does not deviate from atmospheric pressure except for those excursions attributable to Phase I operations, the integrity of the vapor recovery system shall be presumed to be inadequate.

4.6.3 The daily average pressure shall be computed as follows:

Zero and negative pressure shall be computed as zero pressure; and
Time at positive and zero pressures shall be included in the calculation.
(Example: 6 hours at +1.0 inches H_2O and 18 hours at -1.0inches H_2O yields an average daily pressure of 0.25 inches H_2O.)

4.6.4 The daily high pressure shall be computed as follows:

Zero and negative pressure shall be computed as zero pressure;
Time at positive and zero pressures shall be included in the calculation;
The average positive pressure for each hour shall be calculated; and
The highest hour is the daily high pressure for the day.

4.6.5 A rolling 30 day average of the daily average pressures and the daily high pressures for each day shall be calculated by averaging the most current daily value with the appropriate values for the previous 29 days. These 30-day rolling averages shall meet the following criteria:

Alvarez v. Chevron Corp., No. 09-30608 archived on September 9, 2011

The daily average pressure shall not exceed +0.25 inches H_2O.
The daily high pressure shall not exceed +1.5 inches H_2O.

4.6.6 Pressure readings shall be taken in accordance with TP-201.7 (Continuous Pressure Monitoring). Other methods of data collection and analysis may be used with prior approval of the Executive Officer.

4.7 Nozzle Criteria

4.7.1 Each vapor recovery nozzle shall be capable of refueling any vehicle that complies with the fillpipe specifications and can be fueled by a conventional nozzle.

4.7.2 Each vapor recovery nozzle shall be “dripless,” meaning that no more than three drops shall occur following each refueling operation. This shall be determined in accordance with TP-201.2D (Post-Fueling Drips from Nozzles).

4.7.3 Each vapor recovery nozzle shall comply with the following:
(a) The terminal end shall have a straight section of at least 2.5 inches (6.34 centimeters) in length;
(b) The outside diameter of the terminal end shall not exceed 0.840 inch (2.134 centimeters) for the length of the straight section; and

(c) The retaining spring or collar shall terminate at least 3.0 inches (7.6 centimeters) from the terminal end.

4.7.4 Additional nozzle criteria are contained in Sections 5 and 6.

4.8 Liquid Retention

4.8.1 Liquid retention in the nozzle and vapor path on the atmospheric side of the vapor check valve shall not exceed 100 ml per 1,000 gallons. This shall be determined in accordance with TP-201.2E (Gasoline Liquid Retention in Nozzles and Hoses).

4.8.2 Nozzle "spitting" shall not exceed 1.0 ml per nozzle per test and shall be determined in accordance with TP-201.2E (Gasoline Liquid Retention in Nozzles and Hoses).

4.8.3 The number of self-service refueling operations observed during certification testing of any system for liquid retention shall be not less than:
10 refueling operations per nozzle (not including topoffs); and
4 fill-ups (terminated by automatic shut-off, not including topoffs).

4.9 Liquid Removal Systems

Alvarez v. Chevron Corp. No. 09-56698 archived on September 9, 2011

Liquid removal systems are designed to evacuate liquid from the vapor passage of the hose. Such systems are required in configurations that would otherwise be subject to liquid blockage that creates increased emissions.

4.9.1 The liquid removal rate shall be determined in accordance with TP-201.6 (Determination of Liquid Removal of Phase II Vapor Recovery Systems of Dispensing Facilities). The minimum removal rate, averaged over a minimum of 4 gallons, shall equal or exceed 5 ml per gallon. The minimum dispensing rate for this requirement shall be specified during the certification process.

4.10 Nozzle/Dispenser Compatibility

The nozzle and dispenser shall be compatible as follows:

4.10.1 The nozzle and dispenser shall be designed such that the vapor check valve is in the closed position when the nozzle is properly hung on the dispenser.

4.10.2 The nozzle and dispenser shall be designed such that the nozzle cannot be hung on the dispenser with the nozzle valves in the open position.

4.11 Unihose MPD Configuration

There shall be only one hose and nozzle for dispensing gasoline on each side of a multi-product dispenser (MPD). This shall not apply to facilities installed prior to April 1, 2003 unless the facility replaces more than 50 percent of the dispensers. Facility modifications that meet the definition of "major modification" for a Phase II

system in D-200 trigger the unihose requirement as the facility is considered a “new installation”. Exception: dispensers which must be replaced due to damage resulting from an accident or vandalism may be replaced with the previously installed type of dispenser.

4.12 Vapor Return Path

The requirements of Sections 4.12.1 through 4.13.2 for the vapor return piping and, if applicable, condensate traps, from the dispenser riser to the underground storage tank, shall apply to any facility installed after the effective date of this procedure.

4.12.1 The vapor return path from any fueling point to the underground storage tank shall be free of liquid blockage.

4.12.2 The Phase II riser shall have a minimum nominal internal diameter of one inch (1” ID). The connection between the Phase II riser and the dispenser shall be made with materials listed for use with gasoline, and shall have a minimum nominal 1” ID.

4.12.3 All new vapor return piping shall have a minimum nominal internal diameter of three inches (3” ID) from the point of the first manifold to the storage tank, including the float vent valve, if applicable. Facilities permitted by a local district prior to the adoption date of this procedure shall be required to meet the minimum three inch diameter standard only upon facility modifications requiring exposing at least 50 percent of the underground vapor return piping.

Alvarez v. Chevron Corp., No. 09-56608 archived on September 9, 2011

4.12.4 Wherever feasible, the recommended minimum slope of the vapor return piping, from the dispensers to the tank, shall be at least one-fourth (1/4) inch per foot of run. The minimum slope, in all cases, shall be at least one-eighth (1/8) inch per foot of run.

4.12.5 The vapor return piping shall be constructed of rigid piping, or shall be contained within rigid piping, or shall have an equivalent method, approved by the Executive Officer, to ensure that proper slope is achieved and maintained. (Note: this does not a apply to flexible connectors at potential stress points, such as storage tanks, dispensers, and tank vents.) Rigidity shall be determined in accordance with TP-201.2G (Bend Radius Determination for Underground Storage Tank Vapor Return Piping),

4.12.6 The Executive Officer shall determine, by testing and/or engineering evaluation, the maximum allowable length of vapor return piping for the system.

4.13 Liquid Condensate Traps

Liquid condensate traps (also known as knockout pots and thief ports) are used to keep the vapor return piping clear of liquid when it is not possible to achieve the necessary slope from the dispenser to the underground storage tank.

4.13.1 Liquid condensate traps shall be used only when the minimum slope requirements of 1/8" per foot of run cannot be met due to the topography.

4.13.2 When condensate traps are installed, they shall be:

(a) certified by CARB;
(b) maintained vapor tight;
(c) accessible for inspection upon request;
(d) capable of automatic evacuation of liquid; and
(e) equipped with an alarm system in case of failure of the evacuation system.

4.14 Connections and Fittings

All connections, fittings, or components not specifically certified with an allowable leakrate shall not leak. Vapor leaks may be determined by the use of commercial leak detection solution, or by bagging individual components, when the vapor containment space of the underground storage tank is subjected to a non-zero gauge pressure. (Note: leak detection solution will detect vapor leaks only when a positive gauge pressure exists). The absence of liquid leaks may be verified by visual inspection for seepage or drips.

Alvarez v. Chevron Corp., No. 09-56698 archived on September 9, 2011

5. PHASE II PERFORMANCE STANDARDS AND SPECIFICATIONS APPLICABLE TO BALANCE VAPOR RECOVERY SYSTEMS

Table 5-1 summarizes the performance standards and specifications specifically applicable to Phase II Balance vapor recovery systems. These systems are also subject to all of the standards and specifications in Sections 3 and 4, and the applicable requirements in Sections 7 and 8.

Table 5-1
Phase II Performance Standards and Specifications
APPLICABLE TO PHASE II BALANCE VAPOR RECOVERY SYSTEMS

Performance Type	Requirement	Sec.	Std Spec.	Test Procedure
Nozzle Criteria Each Balance Nozzle Shall:	Have an Insertion Interlock Be Equipped with a Vapor Valve	5.1	Spec.	Testing and Eng. Eval.
Insertion Interlock	Verification of No Liquid Flow Prior to Bellows Compression	5.1	Spec.	Testing and Eng. Eval.
Vapor Check Valve Leakrate	$\leq$ 0.07 CFH at 2.0 inches H_2O	5.1	Spec.	TP-201.2B
Bellows Insertion Force	Pounds (force) to Retaining Device Specified by Applicant and Verified During Certification Testing	5.1	Spec.	Testing and Eng. Eval.
Nozzle Pressure Drop	ΔP at 60 CFH of $N_2 \leq 0.08$ inches H_2O	5.2	Std.	TP-201.2J
Hose Pressure Drop [Including Whip Hose]	ΔP at 60 CFH of $N_2 \leq 0.09$ inches H_2O	5.2	Std.	TP-201.2J
Breakaway Pressure Drop	ΔP at 60 CFH of $N_2 \leq 0.04$ inches H_2O	5.2	Std.	TP-201.2J
Dispenser Pressure Drop	ΔP at 60 CFH of $N_2 \leq 0.08$ inches H_2O	5.2	Std.	TP-201.2J
Swivel Pressure Drop	ΔP at 60 CFH of $N_2 \leq 0.01$ inches H_2O	5.2	Std.	TP-201.2J
Pressure Drop Phase II Riser to Tank [Including Vapor Return Line Impact Valve)	ΔP at 60 CFH of $N_2 \leq 0.05$ inches H_2O	5.2	Std.	TP-201.4
Pressure Drop from Nozzle to UST	ΔP at 60 CFH of $N_2 \leq 0.35$ inches H_2O ΔP at 80 CFH of $N_2 \leq 0.62$ inches H_2O	5.2	Std.	TP-201.4

Alvarez v. Chevron Corp., No. 09-56298 archived on September 9, 2011

5.1 Balance Nozzle Criteria

Nozzles for use with balance systems shall comply with all of the criteria in Section 4.7, as well as all the criteria below.

5.1.1 Each balance nozzle shall have an insertion interlock designed to prevent the dispensing of fuel unless there is an indication that the nozzle is engaged in the fillpipe (i.e., the nozzle bellows is compressed). The performance specifications for the insertion interlock mechanism shall be established during the certification process.

5.1.2 Each balance nozzle shall be equipped with a vapor valve. The leakrate for the vapor valve shall not exceed 0.07 CFH at a pressure of 2.0 inches H_2O.

5.1.3 The force necessary to compress the nozzle bellows to the retaining device, or a specified distance, shall be specified by the applicant for certification and verified during certification testing.

5.2 Dynamic Pressure Drop Criteria for Balance Systems

5.2.1 The dynamic pressure drop for balance systems shall be established in accordance with TP-201.4 (Dynamic Back Pressure). The dynamic pressure drop standards from the tip of the nozzle spout to the underground storage tank, with the Phase I vapor poppet open, shall not exceed the following:

Alvarez v. Chevron Corp., No. 09-56698 archived on September 9, 2011

0.35 inches H_2O at a flowrate of 60 CFH of Nitrogen; and
0.62 inches H_2O at a flowrate of 80 CFH of Nitrogen.

5.2.2 The dynamic pressure drop for balance system components, measured in accordance with TP-201.2J (Pressure Drop Bench Testing of Vapor Recovery Components), shall not exceed the following:

Nozzle:	0.08 inches H_2O
Hose (Including Whip Hose):	0.09 inches H_2O
Breakaway:	0.04 inches H_2O
Dispenser:	0.08 inches H_2O
Swivel:	0.01 inches H_2O

The dynamic pressure drop for the balance system vapor return line, including the impact valve, shall not exceed the following:

Phase II Riser to UST:	0.05 inches H_2O

The applicant may request to be certified to a dynamic pressure lower than those specified above. This shall be specified in the application and verified during certification testing.

6. PHASE II PERFORMANCE STANDARDS AND SPECIFICATIONS APPLICABLE TO ALL ASSIST VAPOR RECOVERY SYSTEMS

Table 6-1 summarizes the performance standards and specifications specifically applicable to Phase II Assist vapor recovery systems. These systems are also subject to all of the standards and specifications in Sections 3, 4 and the applicable requirements in Sections 7 and 8.

Table 6-1
Phase II Performance Standards and Specifications
APPLICABLE TO ALL PHASE II VACUUM ASSIST SYSTEMS

Performance Type	Requirement	Sec.	Std. Spec.	Test Procedure
Nozzle Criteria Each Assist Nozzle Shall:	Possess a Mini-Boot Have an Integral Vapor Valve	6.1	Spec.	Testing and Eng. Eval.
Nozzle Vapor Valve Leakrate	≤ 0.038 CFH at +2.0 inches H_2O ≤ 0.10 CFH at –100 inches H_2O	6.1	Spec.	TP-201.2J
Nozzle Pressure Drop Specifications ΔP at Specified Vacuum Level	Specified by Applicant and Verified During the Certification Process	6.1	Spec.	TP-201.2B
Maximum Air to Liquid Ratio	1.00 (without processor) 1.30 (with processor)	6.2	Std.	TP-201.5
Air to Liquid Ratio Range	Specified by Applicant and Verified During the Certification Process	6.2	Spec.	TP-201.5

Alvarez v. Chevron Corp., No. 19-56698 archived on September 6, 2011

6.1 Nozzle Criteria

6.1.1 Nozzles for use with assist systems shall comply with all of the criteria in Section 4.7, as well as all the criteria below.

6.1.2 Each assist nozzle shall be equipped with a mini-boot that both allows for a lower A/L ratio and minimizes the quantity of liquid gasoline exiting the fillpipe during a spitback event.

6.1.3 Each assist nozzle shall be equipped with a vapor valve. The leakrate for the vapor valve shall not exceed the following:

0.038 CFH at a pressure of +2.0 inches H_2O; and
0.10 CFH at a vacuum of –100 inches H_2O.

6.1.4 The nozzle pressure drop shall be specified by the applicant and verified during the certification process.

6.2 Air to Liquid Ratio

The air to liquid (A/L) ratio shall be specified by the applicant and verified during the certification process in accordance with TP-201.5 (Air to Liquid Volume Ratio). The maximum A/L shall not exceed the following:

1.00 (without processor); and
1.30 (with processor).

7. PHASE II PERFORMANCE STANDARDS AND SPECIFICATIONS APPLICABLE TO ASSIST SYSTEMS UTILIZING A CENTRAL VACUUM UNIT

Table 7-1 summarizes the performance standards and specifications specifically applicable to Phase II Assist vapor recovery systems utilizing a Central Vacuum Unit. These systems are also subject to all of the standards and specifications in Sections 3, 4, 6 and, if applicable, Section 8.

Table 7-1
Phase II Performance Standards and Specifications
APPLICABLE TO ALL PHASE II ASSIST SYSTEMS
UTILIZING A CENTRAL VACUUM UNIT

Performance Type	Requirement	Sec.	Std. Spec.	Test Procedure
Specification of Minimum and Maximum Vacuum Levels	Specified by Applicant and Verified During the Certification Process	7.1	Spec.	Testing and Eng. Eval.
Number of Refueling Points Per Vacuum Device	Specified by Applicant and Verified During the Certification Process; and Failure Mode Testing	7.2	Spec.	TP-201.5

Alvarez v. Chevron Corp., No. 09-5669 Archived on September 9, 2011

7.1 Vacuum Levels Generated by the Collection Device

The normal operating range of the system shall be specified by the applicant and verified during the certification process, and the maximum and minimum vacuum levels shall be specified in the certification Executive Order. The applicant may propose failure mode testing to extend the limits of the operating range.

7.2 Maximum Number of Refueling Points per Vacuum Device

The maximum number of refueling points that can be adequately associated with the vacuum device, including meeting the A/L limits, shall be specified by the applicant and verified during certification testing. The test shall be conducted with all of the refueling points except one using the same fuel grade, and the refueling point on which the effectiveness is being tested using a different fuel grade. An engineering evaluation followed by certification testing shall demonstrate the system's ability to meet the required A/L ratio and/or emission factor with a self-adjusting submersible turbine pump (STP).

8. PHASE II PERFORMANCE STANDARDS AND SPECIFICATIONS APPLICABLE TO SYSTEMS UTILIZING A DESTRUCTIVE OR NON-DESTRUCTIVE PROCESSOR

Tables 7-1 and 8-2 summarize the performance standards and specifications specifically applicable to Phase II vapor recovery systems utilizing a processor. These systems are also subject to all of the standards and specifications in Sections 3 and 4 and, the applicable of Sections 5, 6, and 7.

Table 8-1
Phase II Performance Standards and Specifications
APPLICABLE TO ALL PHASE II SYSTEMS
UTILIZING A DESTRUCTIVE PROCESSOR

Performance Type	Requirement	Sec.	Std. Spec.	Test Procedure
Hazardous Air Pollutants (HAPS) from the processor	HAPS from the Processor Shall Not Exceed these Limits: 1,3-Butadiene: 1.2 lbs/year Formaldehyde: 36 lbs/year Acetaldehyde: 84 lbs/year	8.1, 8.2	Std.	TP-201.2H
Maximum HC Rate from Processor	≤ 5.7 lb/1,000 gallons (in breakdown mode)	8.3	Spec.	Testing and Eng. Eval.
Typical Load on Processor	Specified by Applicant and Verified during the Certification Process	8.4	Spec.	Testing and Eng. Eval.
Processor Operation Time	Specified by Applicant and Verified during the Certification Process	8.5	Spec.	Testing and Eng. Eval.

Alvarez v. Chevron Corp. No. 394566698 archived on September 9, 2011

Table 8-2
Phase II Performance Standards and Specifications
APPLICABLE TO ALL PHASE II SYSTEMS
UTILIZING A NON-DESTRUCTIVE PROCESSOR

Performance Type	Requirement	Sec.	Std. Spec.	Test Procedure
Maximum HC Rate from Processor	≤ 5.7 lb/1,000 gallons (in breakdown mode)	8.3	Spec.	Testing and Eng. Eval.
Typical Load on Processor	Specified by Applicant and Verified during the Certification Process	8.4	Spec.	Testing and Eng. Eval.
Processor Operation Time	Specified by Applicant and Verified during the Certification Process	8.5	Spec.	Testing and Eng. Eval.

8.1 Processor Emission Factors

The emission factors shall be established in accordance with TP-201.2 (Efficiency and Emission Factor for Phase II Systems).

8.2 Hazardous Air Pollutants from Destructive Processors

Hazardous Air Pollutants (HAPS) from the processor shall not exceed the following limits:

1,3-Butadiene:	1.2 pounds per year
Formaldehyde:	36 pounds per year
Acetaldehyde:	84 pounds per year

The emission factor shall be established in accordance with TP-201.2H (Determination of Hazardous Air Pollutants from Vapor Recovery Processors).

8.3 Maximum Hydrocarbon Feedrate from the Processor

The maximum Hydrocarbon feedrate from the processor, in breakdown mode, shall not exceed 5.7 pounds per 1,000 gallons.

8.4 Typical Load on the Processor

The typical load on the processor shall be identified by the applicant and verified during the certification process, and shall be included in the specifications in the certification Executive Order.

Alvarez v. Chevron Corp. No. 08-56698 archived on September 9, 2011

8.5 Processor Operation Time

The typical processor operation time shall be identified by the applicant and verified during the certification process, and shall be included in the specifications in the certification Executive Orders.

9. ADDITIONAL REQUIREMENTS OF CERTIFICATION

9.1 Financial Responsibility

The adequacy of the (1) methods of distribution, (2) replacement parts program, (3) financial responsibility of the applicant and/or manufacturer, and (4) other factors affecting the economic interests of the system purchaser shall be evaluated by the Executive Officer and determined by him or her to be satisfactory to protect the purchaser. A determination of financial responsibility by the Executive Officer shall not be deemed to be a guarantee or endorsement of the manufacturer or applicant.

Each applicant submitting a system and/or component for certification shall be charged fees not to exceed the actual cost of evaluating and testing the system to determine whether it qualifies for certification. The applicant is required to demonstrate ability to pay the cost of testing prior to certification and performance testing. This may take the form of posting a bond of not less than $20,000. An

Executive Order certifying the system shall not be issued until the CARB certification fee has been paid in full.

9.2 Warranty

The requirements of this section shall apply with equal stringency both to the original applicant and to rebuilders applying for certification. For systems that include components not manufactured by the applicant, the applicant shall provide information that shows that all components meet the following requirements.

9.2.1 The applicant and/or manufacturer of vapor recovery system equipment shall provide a warranty for the vapor recovery system and components, including all hanging hardware, to the initial purchaser and any subsequent purchaser within the warranty period. This warranty shall include the ongoing compliance with all applicable performance standards and specifications. The applicant and/or manufacturer may specify that the warranty is contingent upon the use of trained installers.

9.2.2 The minimum warranty shall be for one year from the date of installation of all systems and components. The applicant may request certification for a warranty period exceeding the minimum one-year requirement.

9.2.3 The manufacturer of any vapor recovery system or component shall affix a warranty tag to certified equipment that shall be removed only by the owner/operator of the vapor recovery equipment. The tag shall contain at least the following information.

Alvarez v. Chevron Corp.; No. 09-56288 archived on September 9, 2011

(a) Notice of warranty period;
(b) Date of manufacture, or where date is located on component;
(c) Shelf life of equipment or sell-by date, if applicable;
(d) A statement that the component was factory tested and met all applicable performance standards and specifications; and
(e) A listing of the performance standards and/or specifications to which it was certified.

9.2.4 The Executive Officer shall certify only those systems which, on the basis of an engineering evaluation of such system's component qualities, design, and test performance, can be expected to comply with such system's certification conditions over the one-year warranty period specified above.

9.3 Installation, Operation and Maintenance of the System.

Systems requiring unreasonable maintenance or inspection/maintenance frequencies, as determined by the Executive Officer, shall not be certified. The manufacturer of any vapor recovery system or component shall be responsible for developing manual(s) for all installation, operation and maintenance procedures. This manual(s) shall be reviewed during the certification process and the certification shall not be issued until the Executive Officer has approved the manual(s).

9.3.1 The manual(s) shall include all requirements for the proper installation of the system and/or component. The manual(s) shall include recommended maintenance and inspection procedures and equipment performance procedures, including simple tests the operator can use to verify that the system or component is operating in compliance with all applicable requirements. The Executive Officer may require the inclusion of additional procedures.

9.3.2 No changes shall be made to CARB-approved manuals without the Executive Officer's prior written approval.

9.3.3 The equipment manufacturer shall be responsible for taking all reasonable and necessary steps to ensure that, at the time the system or component is installed, the owner/operator of the facility is provided with a copy of the appropriate manual(s) and any training specified in the applicable Executive Order.

9.4 Identification of System Components

9.4.1 All components for vapor recovery systems shall be permanently identified with the manufacturer's name, part number, and a unique serial number. This requirement does not apply to replacement subparts of the primary component. Specific types of components may be exempted from this requirement if the Executive Officer determines, in writing, that this is not feasible.

Alvarez v. Chevron Corp., No. 09-56698 archived on September 9, 2011

9.4.2 Nozzle serial numbers shall be permanently affixed to, or stamped on, the nozzle body and easily accessible for inspection. The location of the serial number shall be evaluated by the Executive Officer prior to certification.

10. IN-STATION DIAGNOSTIC SYSTEMS

10.1 General Requirements

10.1.1 All GDF vapor recovery systems, unless specifically exempted, shall be equipped with an In-Station Diagnostic (ISD) system. Gasoline dispensing facilities that dispense less than or equal to 600,000 gallons per year are exempted from ISD requirements.

10.1.2 All GDF vapor recovery systems shall be equipped with an ISD system or device that has the capability to automatically prohibit the dispensing of fuel and has the capability to automatically inform the station operator in the event of either a malfunction, failure, or degradation of the system as defined below in Section 10.2.

10.1.3 All ISD systems shall be equipped with an RS232 port to remotely access ISD status information using standardized software.

10.1.4 The ISD manufacturer shall provide a means of testing and calibrating the sensors or devices installed on the GDF vapor recovery ISD system, including procedures for verifying that the ISD system operates properly. The means of testing and calibration shall be verified and subjected to failure mode testing during the certification process.

10.1.5 Personnel trained and certified by the Executive Order certification holder, ISD manufacturers, or California Contractors State License Board shall test and calibrate the installed vapor recovery ISD system sensors or devices annually, at a minimum, with test equipment calibrated to National Institute of Standards and Technology-traceable standards. The minimum annual calibration frequency requirement may be waived and replaced with a frequency to be determined during certification testing if the ISD system manufacturer demonstrates equivalent self testing and automatic calibration features. All vapor recovery ISD system sensors or devices not performing in conformance with the manufacturer's specifications shall be promptly repaired or replaced.

10.1.6 Subject to the Executive Officer approval, other monitoring strategies may be used provided the manufacturer provides a description of the strategy and supporting data showing such strategy is equivalent to these requirements. Information such as monitoring, reliability, and timeliness shall be included.

Alvarez v. Chevron Corp., No. 09-56608 archived on September 9, 2011

10.1.7 The vapor recovery ISD system shall include self-testing including the ISD system and sensors that will be verified during the certification process.

10.1.8 The ISD system shall maintain an electronic archive of monthly reports for a period of 12 months and an archive of daily reports for the last rolling 365 days.

10.1.9 The vapor recovery ISD system shall be operational a minimum of ninety five percent (95%) of the time, based on an annual basis or prorated thereof, and shall record the percentage of ISD up-time on a daily basis.

10.1.10 The Executive Officer shall, during certification testing, verify that the system is capable of detecting failures (of a size defined in each subsection, below) with at least a 95% probability while operating at no more than a 1% probability of false alarms. A false alarm occurs when the ISD system issues an alarm, but the vapor recovery system is functioning normally; i.e., the vapor recovery system is operating within the parameter limits required by CP-201 and specified in its Executive Orders.

10.1.11 Certification testing shall be performed in accordance with TP-201.2I (Test Procedure for In-Station Diagnostic Systems).

10.2 Monitoring Requirements

10.2.1 Air/Liquid (A/L) Ratio Vapor Collection Monitoring

(a) Requirement

The GDF vapor recovery ISD system shall monitor the Air to Liquid (A/L) ratio for vapor recovery systems which have A/L limits required by Section 6 and specified in their Executive Orders.

(b) Malfunction Criteria – Gross Failure

The GDF vapor recovery ISD system shall assess, on a daily basis, based on a minimum of 15 non-ORVR dispensing events, when the A/L ratio is at least 75% below the lower certified A/L ratio or at least 75% above the upper certified A/L ratio, shall activate a warning alarm, and shall record the event. This condition must be detected with a probability of 95%. If fewer than 15 non-ORVR dispensing events occur in a day, the ISD system may accumulate events over an additional day or days until a minimum of 15 non-ORVR events is reached. When two such consecutive failed assessments occur, the ISD system shall activate a failure alarm, record that event, and prohibit fuel dispensing from the affected fueling point(s). The ISD system shall have the capability of re-enabling dispensing, and shall record that event.

Alvarez v. Chevron Corp., No. 09-56698 archived on September 9, 2011

For example, for a vapor recovery system that is certified to operate with an A/L ratio between 0.9 and 1.0, a failed assessment shall occur if the daily A/L ratio is less than or equal to .22 (25% of .9) or if the daily ratio is greater than or equal to 1.75 (75% more than 1.0). When the ISD system assesses two consecutive failures, the ISD system shall activate an alarm.

(c) Malfunction Criteria - Degradation

The GDF vapor recovery ISD system shall assess, on a weekly basis, based on a minimum of 30 non-ORVR dispensing events, when the A/L ratio is at least 25% below the lower certified A/L ratio or at least 25% above the upper certified A/L ratio, shall activate a warning alarm, and shall record the event. This condition must be detected with a probability of 95%. If fewer than 30 non-ORVR dispensing events occur in a week, the ISD system may accumulate events over an additional day or days until a minimum of 30 non-ORVR events is reached. When two such consecutive failed assessments occur, the ISD system shall activate a failure alarm, record that event, and prohibit fuel dispensing from the affected fueling point(s). The ISD system shall have the capability of re-enabling dispensing, and shall record that event.

For example, for a vapor recovery system that is certified to operate with an A/L ratio between 0.9 and 1.0, a failed assessment shall occur if the weekly A/L ratio is less than or equal to .68 (75% of .9) or if the weekly ratio is greater than or equal to 1.25 (25% more than 1.0). When the ISD system assesses two consecutive failures, the ISD system shall activate an alarm.

10.2.2 Balance Performance Vapor Collection Monitoring

(a) Requirement

The GDF vapor recovery ISD system shall monitor vapor collection performance for balance vapor recovery systems. Vapor collection performance is defined as the amount of vapor collected relative to fuel dispensed to a non-ORVR vehicle. The baseline vapor collection performance is established during certification as described in TP-201.1I.

(b) Malfunction Criteria

The GDF vapor recovery ISD system shall assess, on a daily basis, based on a minimum of 15 non-ORVR dispensing events, when the vapor collection performance is less than 50%, shall activate a warning alarm, and shall record the event. The vapor collection performance can be monitored using flowmeters, pressure transducers, liquid sensors or any other means that indicates a 50% vapor collection decrease from the baseline. This condition must be detected with a probability of 95%. If fewer than 15 non-ORVR dispensing events occur in a day, the ISD system may accumulate events over an additional day or days until a minimum of 15 non-ORVR events is reached. When two such consecutive failed assessments occur, the ISD system shall activate a failure alarm, record that event, and prohibit fuel dispensing from the affected fueling points. The ISD system shall have the capability of re-enabling dispensing, and shall record that event.

Alvarez v. Chevron Corp., No. 09-56698 archived on September 9, 2011

10.2.3 Central Vacuum Unit Monitoring

(a) Requirement

The GDF vapor recovery ISD system shall verify that the central vacuum unit is operating within the specified range by measuring and recording the vacuum at a minimum of one reading every minute.

(b) Malfunction Criteria

The GDF vapor recovery ISD system shall assess, on a continuous rolling 20 minute basis, when a vacuum failure occurs as determined by the Executive Officer for each Phase II system, shall activate a

failure alarm, record the event, and prohibit fuel dispensing from the affected fueling points. This condition must be detected with a probability of 95%. The ISD system shall have the capability of re-enabling dispensing and will disable the central vacuum unit monitoring for 24 hours, and shall record that event.

10.2.4 Ullage Pressure Vapor Containment Monitoring

(a) Requirement

The GDF vapor recovery ISD system shall measure and record the pressure of each UST ullage at a minimum of one reading every minute. One pressure monitoring device may be used for multiple USTs that have common vapor recovery piping.

(b) Malfunction Criteria – Gross Failure

The GDF vapor recovery ISD system shall assess, on a weekly basis, when the UST ullage pressure exceeds 1.5” wcg for at least 5% of the time, shall activate a warning alarm, and shall record the event. This condition must be detected with a probability of 95%. When two such consecutive failed assessments occur, the ISD system shall activate a failure alarm, record that event, and prohibit fuel dispensing from the affected fueling point(s). The ISD system shall have the capability of re-enabling dispensing, and shall record that event.

Alvarez v. Chevron Corp., No. 09-56698 archived on September 9, 2011

(c) Malfunction Criteria – Degradation

The GDF vapor recovery ISD system shall assess, on a monthly basis, when the UST ullage pressure exceeds 0.50" wcg for at least 25% of the time, shall activate a warning alarm, and shall record the event. This condition must be detected with a probability of 95%. When two such consecutive failed assessments occur, the ISD system shall activate a failure alarm, record that event, and prohibit fuel dispensing from the affected fueling points. The ISD system shall have the capability of re-enabling dispensing, and shall record that event.

(d) Malfunction Criteria – Pressure Integrity

The ISD system shall detect the potential for excessive rates of vapor leakage from the UST system. The ISD system shall assess, on a weekly basis, when the vapor recovery system leaks at a rate which is at least 2 times the rate allowed in section 4.2, shall activate a warning alarm, and shall record the event. This condition must be detected with a probability of 95%. When two such consecutive failed assessments occur, the ISD system shall activate a failure alarm, record that event, and prohibit fuel dispensing from the affected

fueling point(s). The ISD system shall have the capability of re-enabling dispensing, and shall record that event.

10.2.5 Vapor Processing Monitoring

(a) Requirement

The GDF vapor recovery ISD system shall verify that the processor is functioning properly as specified in Section 8 and the Executive Order.

(b) Malfunction Criteria

The GDF vapor recovery ISD system shall assess, on a daily basis, when the vapor processor is malfunctioning as defined in the Executive Order, shall activate a warning alarm, and shall record the event. When two such consecutive failed assessments occur, the ISD system shall activate a failure alarm, record that event, and prohibit fuel dispensing from the affected fueling points. The ISD system shall have the capability of re-enabling dispensing, and shall record that event.

10.3 Records

Alvarez v. Chevron Corp. No. 09-55698 archived on September 9, 2011

10.3.1 The GDF vapor recovery ISD system shall generate a monthly report which includes the following:

(a) ISD operational time (as a percentage);
(b) Vapor Recovery system's operating requirements;
(c) Vapor recovery system pass time (as a percentage);
(d) ISD monitoring requirements;
(e) Warnings - this shall include the time and date;
(f) Failures - this shall include the time and;
(g) Event log describing re-enabling action taken - this shall include the time and date; and the time and date the ISD system clock was adjusted.

10.3.2 The GDF vapor recovery ISD system shall generate a monthly printout version on demand which includes the following:

(a) ISD operational time (as a percentage);
(b) Vapor recovery system pass time (as a percentage);
(c) Warnings - this shall include the time and date of the last ten warnings in the selected month;
(d) Failures - this shall include the time and date of the last ten failures in the selected month;
(e) Event Log - this shall include the time and date of the last ten logged exception events in the selected month including re-enabling actions taken and any ISD system clock adjustments.

10.3.3 The GDF vapor recovery ISD system shall generate a daily report which includes the following:

(a) Record of the percentage of ISD up-time on a daily basis;
(b) Highest ullage pressure;
(c) Lowest ullage pressure;
(d) 75th percentile ullage pressure;
(e) 95th percentile ullage pressure;
(f) Daily measured values of each fueling point; and
(g) Daily pass or fail assessment for each fueling point, and
(h) Processor Assessment.

10.3.4 Daily reports (as outlined in Section 10.3.3) and monthly printout versions (as outlined in Section 10.3.2) shall be available for printing, on demand, at the GDF site from the integral ISD printer. Daily reports shall be available for printing for the previous 30 days. Monthly printout versions shall be available for printing for the previous 12 months.

10.3.5 The ISD system shall store the electronic records of the monthly reports, monthly printout versions, and daily reports, such that the records are maintained despite loss of power to the ISD system.

Ramirez v. Chevron Corp., No. 09-56698 archived on September 9, 2011

10.4 Tampering Protection

The GDF vapor recovery ISD system sensors or devices shall be designed and installed in a manner designed to resist unauthorized tampering and to clearly show by visual inspection if tampering has occurred. The ISD system shall be designed and installed so that the station can not dispense fuel unless the ISD system is operating. The manufacturer shall include measures to prevent tampering of the GDF vapor recovery ISD system in the application. All tampering features are subject to Executive Officer approval.

10.5 Readiness/Function Code

The GDF vapor recovery ISD system shall store a code upon first completing a full diagnostic check of all monitored components and systems. This is applicable when the GDF vapor recovery ISD system is initially installed or when power is restored.

10.6 Stored Vapor Recovery System Conditions

Upon detection of a vapor recovery component or system failure the GDF vapor recovery system conditions shall be stored in computer memory. Subject to Executive Officer approval, stored GDF vapor recovery system conditions shall include, but are not limited to, the time, date, which fueling point was shut down (if applicable), and the fault code.

10.7 Failure Mode Testing

The Executive Officer shall conduct, or shall contract for and observe, failure mode testing using test procedures to verify that the ISD system can detect various types of failures, record the incidence of such failures, and respond accordingly with alarms and/or by prohibiting fuel dispensing, as applicable. The ISD system shall have the capability of re-enabling dispensing, and shall record that event. Failure mode testing shall include verification that interaction with ORVR-equipped vehicles will not cause the ISD to inappropriately identify a failure condition. ISD systems with false positive determinations in excess of one percent (1%) shall not be certified.

10.8 Electronic Access

The monthly and daily reports shall be made available on demand through an RS 232 serial port on a standardized data link connector. All ISD reports shall be electronically accessible with standardized software.

11. APPLICATION PROCESS

All of the information specified in the following subsections shall be submitted to the Executive Officer for an application to be evaluated. An application for certification of a Phase I or Phase II vapor recovery system may be made to the Executive Officer by any applicant.

Alvarez v. Omnitron Corp., No. 09-5698 archived on September 9, 2011

The applicant for certification shall identify, in the preliminary application, the standard(s) or specification(s) with which the system complies, and demonstrate that the proposed system meets the primary performance standard(s) or specification(s) required by sections 3 through 8 of this Procedure. For the preliminary application, the applicant shall have performed tests for all applicable performance specifications and standards. Engineering reports of successful test results for all these tests must be included in the preliminary application. In order to expedite the application process, the Executive Officer may determine that the application is acceptable based on the results of abbreviated operational and/or efficiency/emission factor testing and spillage. Test results shall be submitted for an operational test of at least 30 days, for a test of at least 50 vehicles demonstrating adequate collection, and for at least 200 observations of spillage (including at least 40 percent fills-ups), or equivalent verification that the system is capable of meeting the performance standards and specifications. The system, as characterized by these reports, shall be subjected to an engineering analysis. If the preliminary application is deemed acceptable, the applicant shall be notified and shall expeditiously install the system for certification testing. If the preliminary application is deemed unacceptable, it shall be returned to the applicant with the deficiencies identified. The final application shall not be deemed complete until it contains the results of all necessary testing, the approvals of other agencies, the finalized operating and maintenance manuals, and all other requirements of certification.

The manufacturer shall demonstrate, to the satisfaction of the Executive Officer, that the GDF vapor recovery ISD system complies with the performance standards under actual field conditions and simulated failures. Such demonstrations shall include the submission of test results with the certification application.

Applications for non-system-specific components may include only the applicable subsections as determined by the Executive Officer.

Applications shall be evaluated and the applicant shall be notified of the determination within the time periods indicated below. The time periods may be extended by the Executive Officer for good cause.

Table 11-1
Time Requirements for the Certification Application Process

Action	Time	Determination	CARB Response
Preliminary Application Filed	60 days	Acceptable	Preliminary Application Accepted Test Site Approval Granted
Preliminary Application Filed	60 days	Unacceptable	Preliminary Application Returned with Notation of Deficiencies
Application Resubmitted	30 days	Acceptable	Preliminary Re-Application Accepted Test site Approved
Application Resubmitted	30 days	Unacceptable	Initial Re-Application Returned with Notation of Deficiencies
Final Application Complete	120 days	Acceptable	Executive Officer Issues Certification Executive Order
Final Application Complete	120 days	Unacceptable	Executive Officer Denies Certification

Alvarez v. Chevron Corp., No. 09-56698 archived on September 9, 2011

The application shall be written and signed by an authorized representative of the applicant, and shall include all of the items listed below.

(a) Description of Vapor Recovery System (§11.1)
(b) Description of In-Station Diagnostics System (§11.2)
(c) Materials Compatibility with Fuels (§11.3)
(d) Evidence of Compatibility of the System (§11.3)
(e) Evidence of Reliability of the System (§11.4)
(f) Installation and Maintenance Requirements of the System (§11.5)
(g) Evidence of Financial Responsibility of the Applicant (§11.6)
(h) A copy of the warranty (§11.7)
(i) Request for and information about proposed test station (§11.8)
(j) Notification of System Certification Holder, if applicable (§11.9)
(k) Other Information such as the Executive Officer may reasonably require. (§11.10)

11.1 Description of Vapor Recovery System

The application shall include a complete description of the system concept, design and operation, including, but not limited to, the following items.

11.1.1 Identification of critical system operating parameters

11.1.2 Engineering drawings of system, components, and underground piping and tank configurations for which certification is requested.

11.1.3 Engineering parameters for dispenser vapor system control boards and/or all vapor piping, pumps, nozzles, hanging hardware, vapor processor, etc.

11.1.4 Listing of components and evidence that the manufacturers of any components intended for use with the system and not manufactured by the applicant have been notified of the applicant's intent to obtain certification.

11.1.5 Applicable performance standards and specifications of components, specifically identifying those which exceed the minimum acceptable specifications and for which certification of superior performance is requested, and test results demonstrating compliance with these specifications.

Alvarez v. Chevron Corp., No. 09-56698 archived on September 9, 2011

11.1.6 Results of tests demonstrating that the system and components meet all the applicable performance standards. These tests shall be conducted by, or at the expense of, the applicant.

11.1.7 If the application is for an innovative system, the applicant shall identify the performance standard(s) or specification(s) with which the system does not comply. The applicant shall supply any necessary alternative test procedures, and the results of tests demonstrating that the system complies with the emission factor/efficiency. The applicant shall also supply test results demonstrating that the emission benefits of the innovation are greater than the consequences of failing to meet the identified performance standard or specification.

11.1.8 Any additional specifications of the system including, but not limited to, underground pipe sizes, lengths, fittings, volumes, material(s), etc.

11.1.9 Estimated retail price of the system.

11.1.10 For previously tested systems, identification of any and all new components and physical and operational characteristics, together with new test results obtained by the applicant.

11.2 Description of In-Station Diagnostics (ISD)

The applicant shall include the following documentation with the certification application.

11.2.1 A written description of the functional operation of the GDF vapor recovery ISD system.

11.2.2 A table providing the following information shall be included for each monitored component or system, as applicable:

(a) Corresponding fault code;
(b) Monitoring method or procedure for malfunction detection;
(c) Primary malfunction detection parameter and its type of output signal;
(d) Fault criteria limits used to evaluate output signal of primary parameter;
(e) Other monitored secondary parameters and conditions (in engineering units) necessary for malfunction detection;
(f) Monitoring time length and frequency of checks;
(g) Criteria for storing fault code;
(h) Criteria for notifying station operator; and
(i) Criteria used for determining out of range values and input component rationality checks.

11.2.3 A logic flowchart describing the general method of detecting malfunctions for each monitored emission-related component or system.

11.2.4 A written detailed description of the recommended inspection and Maintenance procedures, including inspection intervals that will be provided to the gasoline dispensing facility operator.

Alvarez v. Cameron Corp., No. 09-30588 archived on September 9, 2011

11.2.5 A written detailed description of the training plan to train and certify system testers, repairers, installers, and rebuilders.

11.2.6 A written description of the manufacturer's recommended quality control checks.

11.2.7 A written description of calibration and diagnostic checks.

11.2.8 A list of system components that are monitored by the ISD system and test procedures for failure mode testing. The Executive Officer may modify the list or test procedures based on an engineering evaluation. Additional procedures may be developed as necessary to verify that the system's self-check and self-test features perform accurately.

11.3 Compatibility

11.3.1 The applicant shall submit evidence of system compatibility, including the following:

11.3.2 A procedure developed by the applicant for demonstrating compatibility between the Phase II vapor recovery system and ORVR-equipped vehicles shall be submitted, along with the test results demonstrating compatibility. The procedure shall comply with the provisions in Section 4.4.

11.3.3 Evidence demonstrating the compatibility of the Phase II system with any type of Phase I system with which the applicant wishes the Phase II system to be certified, as specified in Section 4.5. Continuous recordings of pressure recordings in the underground storage tank, as well as failure mode tests, may be used for this demonstration.

11.3.4 Evidence that the system can fuel any vehicle meeting state and federal fillpipe specifications and capable of being fueled by a non-vapor-recovery nozzle.

11.3.5 The applicant shall provide information regarding the materials specifications of all components, including evidence of compatibility with all fuels in common use in California and approved as specified in Section 3.8. If the applicant is requesting a certification for use only with specified fuel formulations, the applicant shall clearly identify, in the application, the included and excluded fuel formulations for which certification is requested.

11.4 Reliability of the System

In order to ensure ongoing compliance, adequately protect public health, and protect the end-user, the reliability of the system shall be addressed in the application, including the following:

Alvarez v. Chevron Corp., No. 09-56698 archived on September 9, 2011

11.4.1 The expected life of system and components.

11.4.2 Description of tests conducted to ascertain compliance with performance standards and specifications for the expected life of the system or component, any procedures or mechanisms designed to correct problems, and test results.

11.4.3 Identification of and emission impact of possible failures of system, including component failures

11.4.4 Procedure and criteria for factory testing (integrity, pressure drop, etc.)

11.5 Installation and Maintenance of the System

The installation and maintenance plan shall be submitted, and shall include at least the following items:

11.5.1 Installation and maintenance manuals of the system, including the ISD.

11.5.2 A plan for training installers in the proper installation of the system.

11.5.3 A replacement parts program.

11.5.4 The estimated installation costs and yearly maintenance costs.

11.6 Evidence of Financial Responsibility

The applicant shall submit evidence of financial responsibility to ensure adequate protection to the end-user of the product as specified in Section 9.

11.7 Warranty

The applicant shall submit a copy of the warranty for the system, warranties for each component, and samples of component tags or equivalent method of meeting warranty requirements as specified in Section 9.

11.8 Test Station

11.8.1 The vapor recovery system shall be installed and tested in an operating gasoline dispensing facility for the purpose of certification testing.

11.8.2 The applicant shall make arrangements for the vapor recovery system to be installed in an operating gasoline dispensing facility meeting the requirements of Section 13.1.

11.8.3 The request for designation as a test site shall include the following information:

(a) Location of the facility;
(b) Verification of throughput for at least six months; and
(c) Hours of operation.

Alvarez v. Chevron Corp., No. 09-56698 archived on September 9, 2011

11.8.4 The applicant shall submit final construction diagrams of the proposed test station. These drawings shall clearly identify the type of vapor recovery piping and connections, pipe slope, and type of storage tanks (i.e., single or double wall, steel, fiberglass, etc.). The Executive Officer may require Professional Engineer or Architect Approved As-Built drawings of the test site. If such drawings are not obtainable, the applicant may petition the Executive Officer to accept alternatives sources of this information, such as detailed schematics of the vapor piping configuration and/or photographs clearly identifying underground components.

11.9 Notification of System Certification Holder

If the applicant is not the manufacturer of all system components, the applicant shall include evidence that the applicant has notified the component manufacturer(s) of the applicant's intended use of the component manufacturers' equipment in the vapor recovery system for which the application is being made.

11.9.1 When the applicant is requesting inclusion of one or more components on a certified system, the applicant shall notify the manufacturer, if any, named as the applicant or holder of the executive order for the certified system.

11.9.2 When the applicant is requesting certification of one or more components as part of a new system, the applicant shall notify all manufacturers.

11.10 Other Information

The applicant shall provide any other information that the Executive Officer may reasonably deem necessary.

12. ENGINEERING EVALUAT/ON OF VAPOR RECOVERY SYSTEMS

The application for certification of all systems and components shall be subjected to an evaluation.

Any system or component not meeting the requirements of the engineering evaluation shall be denied certification and the preliminary application shall be returned to the system or component manufacturer with the reason for failure. Resubmittal of a system, or component, for certification shall not be granted until the system or component deficiencies identified during the initial engineering evaluation have been addressed and corrected. All testing conducted after the preliminary application has been deemed acceptable shall be evaluated, and adjustments shall be made to the certification process as necessary. The final application shall be reviewed and deemed complete prior to the issuance of certification.

The evaluation of the application shall include, but is not limited to, subsections 12.1 through 12.6.

Alvarez v. Chevron Corp., No. 09-56598 archived on September 9, 2011

12.1 Performance Standards and Specifications

The system and component performance standards and specifications identified by the applicant shall be reviewed to ensure that they include and conform to the applicable standards and specifications in Sections 3 through 8 of this Procedure.

12.2 Bench and Operational Testing Results

The procedures for, and results of, bench testing and operational testing contained in the application shall be reviewed. The review shall determine if the procedures adhere to required methodology and ensure that the results meet or exceed the standards and specifications in Sections 3 through 8 of this Procedure. The evaluation shall include a determination of necessary verification testing.

12.3 Evaluation of System Concept

The system concept shall be evaluated to ensure that it is consistent with the generally accepted principles of physics, chemistry, and engineering.

12.4 Materials Specifications and Compatibility with Fuel Formulations

The component materials specifications shall be reviewed to ensure chemical compatibility with gasoline and/or any oxygenates that may be present in gasoline on an ongoing or on a seasonal basis, as specified in Section 3.8. This review shall

include consideration of the variations in gasoline formulations for octane differences and summer fuel and winter fuel.

12.5 Installation and Maintenance Manuals

The installation and maintenance manuals for the system and components shall be reviewed for completeness. Routine maintenance procedures shall be reviewed to ensure adequacy and determine that the procedures are not unreasonable.

12.6 Failure Mode Procedures and Test Results

All failure mode test procedures, and the results of tests conducted by the applicant, shall be reviewed. Additionally, all failure mode testing conducted during the certification process to verify the test results or further evaluate the systems shall be similarly reviewed.

13. VAPOR RECOVERY SYSTEM CERTIFICATION TESTING

The Executive Officer shall conduct, or shall contract for and observe, testing of vapor recovery systems conducted for the purpose of certification. Except as otherwise specified in Section 14 of this procedure, vapor recovery systems shall be subjected to evaluation and testing pursuant to the applicable performance standards, performance specifications, and test procedures specified in Sections 3 through 8 of this procedure.

Alvarez v. Chevron Corp., No. 09-56698 archived on September 9, 2011

Certification testing of vapor recovery systems shall be conducted only after the application for certification has been found to be complete. Some tests may be conducted more than once to characterize the performance of systems and/or system components over time.

Failure of any component during testing of a system shall be cause for termination of the certification test. Further testing of the system shall not be permitted until the applicant identifies the cause of the failure and presents a solution to prevent a recurrence of the failure. The Executive Officer may consider information and circumstances presented by the applicant, including previous certification testing, to demonstrate that the failure was attributable to something other than the design of the component and/or system, and may allow further testing without modification. Except as otherwise provided in Section 16 of this procedure, only complete systems shall be certified.

Any applicant or representative of an applicant found to have performed unauthorized maintenance, or to have attempted to conceal or falsify information, including test results and/or equipment failures, may be subject to civil and criminal penalties and testing of the system or component shall be terminated.

13.1 Test Site for Field Testing of Vapor Recovery Systems

The applicant shall make arrangements for the vapor recovery system to be installed in one or more operating GDFs for certification testing, and the applicant shall request, in writing, approval of the GDF as a test site from the Executive Officer. Upon determining that the GDF meets all of the following criteria, the Executive

Officer shall, in writing, designate the selected location as a test site, and exempt it from any state or local district prohibition against the installation of uncertified equipment. This shall not exempt it from the prohibition against the offer for sale, or sale, of uncertified equipment. Except as otherwise provided in Section 16 of this procedure, the vapor recovery system shall be installed throughout the entire facility. The Executive Officer may require that the system be installed in more than one facility for the purpose of testing.

13.1.1 The test station shall have a minimum gasoline throughput of 150,000 gallons/month. If the facility is equipped with one hose and nozzle for each gasoline grade, rather than a uni-hose configuration, the minimum throughput requirement shall apply to the gasoline grade with the highest throughput. The Executive Officer may, for good cause, grant approval of a test station with lower throughput, provided that the throughput is at least 100,000 gallons/month, and that all necessary testing can be conducted at that facility.

13.1.2 The station shall be located within 100 miles of the CARB offices. When a suitable location for testing cannot be located within 100 miles of the CARB offices, the Executive Officer may, for good cause, grant approval of a test station elsewhere, provided that all the necessary testing can be conducted at that location. The applicant shall be responsible for any additional costs, such as travel, associated with that location.

Alvarez v. Chevron Corp., No. 09-56598, archived on September 9, 2011

13.1.3 Continuous access to the test site by CARB staff, without prior notification, shall be provided. Every effort will be made to minimize inconvenience to the owner/operator of the facility. If testing deemed necessary cannot reasonably be conducted, the facility shall be deemed unacceptable and the test shall be terminated.

13.1.4 If test status is terminated for any reason, uncertified equipment shall be removed within sixty days, unless the Executive Officer extends the time in writing. The local district with jurisdiction over the facility may impose a shorter time.

13.1.5 All test data collected by the applicant at the test site shall be made available to the Executive Officer within fifteen (15) working days. The Executive Officer may specify the format in which the data is to be submitted.

13.1.6 Test site designation may be requested by the applicant, or by another person, for facilities other than the certification test site(s), for the purpose of research and development, or independent evaluation of a system prior to its certification. Approval of such a test site shall be at the discretion of the Executive Officer. The test site shall be subject to all of the above conditions with the exception of 13.1.1 and 13.1.2.

13.2 Bench Testing of Components

Components identified by the engineering evaluation as requiring bench testing to verify performance standards and specification shall be submitted to the Executive

Officer prior to commencement of field testing. This testing may be repeated during and/or after the field testing.

13.3 Operational Test of at Least 180 Days

All vapor recovery systems shall be subjected to an operational test of at least 180 days. Failure to comply with any of the requirements shall result in termination of the operational test. A new operational test may be commenced only after the applicant reapplies, with specific information regarding the cause of the failure and the action taken to correct it. The requirements of the operational test are listed below.

13.3.1 The duration of the test shall be at least 180 days, except as otherwise provided in Section 16.

13.3.2 No maintenance shall be performed other than that which is specified in the operating and maintenance manual. Such maintenance as is routine and necessary shall be performed only after notification of the Executive Officer. Occurrences beyond the reasonable control of the applicant, such as vandalism or accidental damage by customers (e.g., drive-offs), shall not be considered cause for failure of the systems.

13.3.3 Except where it would cause a safety problem, maintenance shall not be performed until approval by the Executive Officer has been obtained. In those situations that require immediate action to avoid potential safety problems, maintenance may be performed immediately and the Executive Officer notified as soon as practicable.

Alvarez v. Chevron Corp., No. 09-35688 archived on September 9, 2014

13.3.4 For the purpose of certification, the pressure in the underground storage tank (UST) shall be monitored and recorded continuously throughout the operational test in accordance with TP-201.7 (Continuous Pressure Monitoring). Testing to verify the integrity of the test station shall be conducted throughout the operational test period, at intervals not to exceed thirty days. Only data collected during periods of pressure integrity shall be deemed valid. The average of no less than three thirty-consecutive-day periods of valid UST pressure data shall be used to verify that the system meets the standard, as specified in Sections 3 and 4. All pressure data shall be used to make this determination. If the system fails to meet the standard, the data may be examined, and the Executive Officer may exclude pressure excursions directly attributable to noncompliant Phase I equipment or operations.

13.3.5 Tests of the performance of the system and/or components shall be conducted periodically throughout the operational test period. If the results of such tests, when extrapolated through the end of the warranty period, show a change that results in the degradation of a performance standard or specification, the Executive Officer may extend or terminate the operational test.

13.4 Failure Mode Testing

Additional failure mode test procedures may be required as needed.

13.4.1 ORVR Compatibility

The Phase II vapor recovery system shall demonstrate the ability to fuel vehicles equipped with ORVR systems without difficulty and to meet the performance standard specified in Section 4.1. Various penetrations of ORVR-equipped vehicles shall be used or simulated to represent typical and worst case conditions. The test procedures used shall be those developed by the applicant, submitted as part of the application for certification, and accepted after engineering evaluation.

13.4.2 ISD System

Failure mode testing for the ISD system is specified in Section 10.9.

13.5 Efficiency and/or Emission Factor Test

Testing to determine the efficiency and/or emission factor of the vapor recovery system shall be conducted in accordance with the applicable test procedures specified in Section 3 or Section 4 of this procedure. Additional testing may be required if the Executive Officer deems it necessary. The additional testing may include, but is not limited to the determination of the Reid Vapor Pressure of the fuel, the volume and/or mass in the vapor return path, fuel and/or tank temperature, and the uncontrolled emission factor.

Alvarez v. Chevron Corp., No. 09-58598, archived on September 9, 2011

13.5.1 **Phase I Systems**. A test of the static pressure integrity of the Phase I system may be conducted, in accordance with TP-201.3, no less than three days prior to conducting TP-201.1 or TP-201.1A. Testing, in accordance with TP-201.1 and/or TP-201.1A, shall be conducted at delivery rates typical and representative of the facilities for which certification is requested. More than one test may be required to accomplish this determination. Certification may be limited to specified maximum loading rates. The integrity of the vapor recovery system shall be verified as soon as possible, but not more than 48 hours, after the completion of this test. Failure of the integrity test shall invalidate the TP-201.1 or TP-201.1A test results unless the Executive Officer determines that the integrity failure did not result in any significant unmeasured emissions.

13.5.2 **Phase II Systems**. A test of the static pressure integrity of the Phase II system shall be conducted, in accordance with TP-201.3, no more than seven days and no less than three days prior to conducting TP-201.2. The integrity of the vapor recovery system, including all test equipment installed for the purpose of conducting TP-201.2, shall be verified as soon as possible, but not more than 48 hours, after the completion of this test. Failure of the integrity test shall invalidate the TP-201.2 test unless the Executive Officer determines that the integrity failure did not result in any significant unmeasured emissions.

13.6 Vehicle Matrix

A representative matrix of 200 vehicles shall be used when testing to determine the Phase II efficiency for the performance standard. The composition of the representative vehicle matrix shall be determined for each calendar year by the Executive Officer in accordance with TP-201.2A (Determination of Vehicle Matrix for Phase II Systems).

13.6.1 Vehicles will be tested as they enter the dispensing facility ("first in" basis) until a specific matrix block of the distribution is filled.

13.6.2 The vehicle matrix shall include a population of ORVR-equipped vehicles consistent with the distribution of ORVR-equipped vehicles in the State of California.

13.6.3 The Executive Officer may exclude any vehicle that fails to comply with the vehicle fillpipe specifications ("Specifications for Fill Pipes and Openings of Motor Vehicle Fuel Tanks" incorporated by reference in title 13, CCR, section 2235).

13.6.4 The Executive Officer may exclude a vehicle prior to its dispensing episode only if such exclusion and its reason is documented; e.g. unusual facility conditions beyond the applicant's control or unusual modifications to the vehicle. All data required by the test procedure shall be taken for such vehicles for subsequent review and possible reversal of the exclusion decision made during the test. The only other reasons for excluding a vehicle from the test fleet are incomplete data or the factors in TP-201.2.

Alvarez v. Chevron Corp., No. 09-35698 archived on September 9, 2011

13.6.5 Additional vehicles may be chosen for testing at the test site by the Executive Officer. The vehicles shall be chosen, according to the Executive Officer's judgment, so that any of the first 200 vehicles, which may later be found to have invalid data associated with them, shall have replacements from among the additional vehicles on a "first in" basis.

13.6.6 A matrix of fewer than 200 vehicles may be made by deleting up to a maximum of three vehicles by reducing the representation in any cell or combination of cells of the vehicle matrix, subject to the following requirements for each candidate reduced cell.

(a) No cell shall be reduced by more than one vehicle

(b) At least one dispensing episode has already been tested in each cell.

(c) None of the other dispensing episodes in the cell have yielded field data which, in the Executive Officer's judgment, would cause a failure to meet the standards specified in section 4.1.

(d) All tested dispensing episodes in all cells have yielded field data that, in the Executive Officer's judgment, would yield valid test results after subsequent review and evaluation.

14. ALTERNATE TEST PROCEDURES AND INSPECTION PROCEDURES

Test procedures other than those specified in this certification procedure shall be used only if prior written approval is obtained from the Executive Officer. A test procedure is a methodology used to determine, with a high degree of accuracy, precision, and reproducibility, the value of a specified parameter. Once the test procedure is conducted, the results are compared to the applicable performance standard to determine the compliance status of the facility. Test procedures are subject to the provisions of Section 41954(h) of the H&SC.

14.1 Alternate Test Procedures for Certification Testing

The Executive Officer shall approve, as required, those procedures necessary to verify the proper performance of the system.

14.2 Request for Approval of Alternate Test Procedure

Any person may request approval of an alternative test procedure. The request shall include the proposed test procedure, including equipment specifications and, if appropriate, all necessary equipment for conducting the test. If training is required to properly conduct the test, the proposed training program shall be included.

14.3 Response to Request

Alvarez v. Chevron Corp., No. 09-06698 archived on September 9, 2011

The Executive Officer shall respond within fifteen (15) days of receipt of a request for approval and indicating that a formal response will be sent within sixty (60) days. If the Executive Officer determines that an adequate evaluation cannot be completed within the allotted time, the Executive Officer shall explain the reason for the delay, and will include the increments of progress such as test protocol review and comment, testing, data review, and final determination. If the request is determined to be incomplete or unacceptable, Executive Officer shall respond with identification of any deficiencies. The Executive Officer shall issue a determination regarding the alternate procedure within sixty (60) days of receipt of an acceptable request.

14.4 Testing of Alternate Test Procedures

All testing to determine the acceptability of the procedure shall be conducted by CARB staff, or by a third party responsible to and under the direction of CARB. Testing shall be conducted in accordance with the written procedures and instructions provided. The testing shall, at a minimum, consist of nine sets of data pairs, pursuant to USEPA Reference Method 301, “Field Validation of Pollutant Measurement Methods from Various Waste Media”, 40 CFR Part 63, Appendix A, 57 Federal Register page 61992. Criteria established in USEPA Reference Method 301 shall be used to determine whether equivalency between the two test methods exists. Method Approval of the procedure shall be granted, on a case-by-case basis, only after all necessary testing has been conducted. Because of the evolving nature of technology and procedures for vapor recovery systems, such approval may or may not be granted in subsequent cases without a new request for approval and additional testing to determine equivalency. If, after approval is granted, subsequent information demonstrates that equivalency between the two methods no longer

meets the USEPA Method 301 requirements, the Executive Officer shall revoke the alternate status of the procedure.

14.5 Documentation of Alternate Test Procedures

Any such approvals for alternate test procedures and the evaluation testing results shall be maintained in the Executive Officer's files and shall be made available upon request. Any time an alternate procedure and the reference procedure are both conducted and yield different results, the results determined by the reference procedure shall be considered the true and correct results.

14.6 Inspection Procedures

Inspection procedures are methodologies that are developed to determine compliance based on applicable performance standards or specifications. Inspection procedures are typically, but not necessarily, parametric in nature and possess a built-in factor of safety, usually at least twice the applicable standard or specification. Inspection procedures are not subject to Section 41954(h) of the H&SC.

Upon submittal of an inspection procedure to CARB, the Executive Officer shall respond within thirty (30) days, providing the applicant with a determination of the applicability of Section 41960.2(d) or Section 41960.2(e) of the H&SC.

Alvarez v. Chevron Corp., No. 09-56698 archived on September 9, 2014

15. CERTIFICATION OF SYSTEMS

The Executive Officer shall certify only those vapor recovery systems that, based on testing and engineering evaluation of that system's design, component qualities, and performance, can be expected to comply with that system's certification over the specified warranty period. With the exception of those components listed in Section 16, this certification procedure is not intended to be used to certify individual system components.

15.1 One Vapor Recovery System per UST System

No more than one certified Phase II vapor recovery system may be installed on each underground storage tank (UST) system unless the Phase II systems have been specifically certified to be used in combination. For facilities with dedicated vapor piping, each underground storage tank and associated dispensing points shall be considered a UST system, and different UST systems may have different vapor recovery systems. For facilities with manifolded vapor piping connecting storage tanks, all the manifolded tanks and associated dispensing points are considered one UST system, and only one certified Phase II vapor recovery system may be installed in conjunction with that UST system.

15.2 Certification Not Transferable

Upon successful completion of all the requirements, certification shall be issued to the company or individual requesting certification, as the Executive Officer deems appropriate. If the ownership, control or significant assets of the certification holder are changed as the result of a merger, acquisition or any other type of transfer, the

expiration date of the certification shall remain unchanged. However, no person shall offer for sale, sell, or install any system or component covered by the certification unless the system or component is recertified under the new ownership, or, in the case of a component, is otherwise certified. Systems installed prior to the transfer shall be subject to the specifications contained in Section 19 of this procedure.

16. CERTIFICATION OF VAPOR RECOVERY SYSTEMS AND COMPONENTS

Certification of vapor recovery systems shall include certification of all components present on the system during certification testing. Certification shall be issued only after each component of the system, and the system as a whole, successfully demonstrates compliance with all of the applicable performance standards and specifications. In order to expedite the certification process and to provide system owners and operators flexibility in the choice of components, some components may be certified as alternatives to the components certified on the system.

16.1 Identification of Components

Table 16-1 contains a listing of components that are system-specific. These components are required to pass all applicable tests as part of a system that is or becomes certified as specified in subsection 16.3. Table 16-2 contains a listing of components that are considered to be non-system-specific. The testing requirements listed in Table 16-2 are the minimum requirements; additional tests may be required as necessary. Any component not included in these tables shall be presumed to be system-specific unless the Executive Officer determines, in writing, that the component may be considered non-system-specific.

Alvarez v. Chevron Corp., No. 09-56698 archived on September 9, 2011

16.2 Properties of Non-System-Specific Components

Only those components that can be defined by performance specifications, that do not directly affect the performance of the system, and that are determined by the Executive Officer to be equivalent to the component with which the system was originally certified, shall be considered non-system-specific components.

16.3 Testing Requirements for System-Specific Components

System-specific components, such as those identified in Tables 16-1, shall be certified only after successfully completing all applicable tests as part of a system. These components may subsequently be considered for use with another certified system of similar design provided that the performance specifications of the components, as specified in the application for the system, are equivalent. The Executive Officer may, upon review of information submitted by the applicant, allow a field compatibility test of at least 30 days to be substituted for an operational test of at least 180 days. Other applicable testing requirements may be abbreviated only if the Executive Officer deems previous testing to be adequate to ensure that the component will perform adequately with the other system and that the component will meet all applicable performance standards and specifications.

16.4 Testing Requirements for Non-System-Specific Components

Non-system-specific components, such as those listed in Table 16-2, shall be subjected to sufficient operational testing to verify the reliability of the component as an alternative to the component with which the certified system was originally tested. Non-system-specific components shall be required to successfully complete at least one operational test of at least 180 days, either as a component of a system undergoing certification testing, or as an alternate component on a certified system. The Executive Officer may authorize abbreviated testing for specific components, such as the vapor piping in a dispenser, for components whose performance can be quantified and not expected to change or degrade over the longer test period. Testing on one system may be used in the evaluation of the component for use on other systems for which the performance is similar with regard to the component. For systems with dissimilar performance characteristics, additional testing may be required.

Table 16-1
System Specific Components

Component
Phase I Spill Container Drain Valve
Phase I Spill Container Drain Valve Configuration
Phase I Product and Vapor Adaptors
Phase I Drop Tube Overfill Prevention Device
Phase II Vacuum Source
Vapor Processor
Nozzle
Control Board

Alvarez v. Chevron Corp., No. 09-5800 archived on September 9, 2011

Table 16-2
Non-System Specific Components

Non-System-Specific Components	Minimum Testing Requirements
Dispenser Vapor Piping	Engineering Evaluation, Pressure Drop, Integrity
Coaxial Hose	Eng. Eval., Operational Test, Pressure Drop, Integrity
Liquid Removal System	Eng. Eval., Operational Test, Pressure Drop, TP-201.6
Breakaway Coupling	Eng. Eval., Operational Test, Pressure Drop, Integrity
Flow Limiter	Eng. Eval., Operational Test, Function Test
Coaxial Swivel	Eng. Eval., Operational Test, Pressure Drop
Conversion Fitting	Eng. Eval., Operational Test, Pressure Drop
Pressure/Vacuum Vent Valve	Eng. Eval., Operational Test, Pressure Drop, TP-201.2B
Impact Valve (for vapor line)	Eng. Eval., Operational Test, Pressure Drop, Integrity
Phase I Delivery Elbow	Eng. Eval., Operational Test, Pressure Drop, TP-201.1
Phase I Drop Tube	Eng. Eval., Operational Test
Phase I Fill or Vapor Cap	Eng. Eval., Operational Test, Integrity
Phase I Spill Containers	Eng. Eval., Operational Test, Integrity
Phase I Tank Bottom Protector	Eng. Eval., Operational Test
Phase I Ball Float Valve	Eng. Eval., Operational Test
Phase I Extractor Fitting	Eng. Eval., Operational Test
Tank Gauge Port Adaptor & Cap	Eng. Eval., Operational Test

Alvarez v. Chevron Corp., No. 09-56698 archived on September 9, 2011

17. DOCUMENTATION OF CERTIFICATION

Documentation of certification shall be in the form of an Executive Order listing the criteria requirements of installation and operation of a certified system.

17.1 Executive Order

The certification Executive Order shall include the following items.

17.1.1 A list of components certified for use with the system.
17.1.2 Applicable Performance Standards, Performance Specifications and Test Procedures.
17.1.3 Applicable Operating Parameters and Limitations.
17.1.4 Warranty period(s).
17.1.5 Factory testing requirements, if applicable.

17.2 Summary of Certification Process

A summary of the certification process for each certified system shall be prepared. It shall contain documentation of the successful completion of all applicable portions of the requirements contained in this Certification Procedure including but not limited to the following: All problems encountered throughout the certification process, any changes made to address the identified problems, the location of the test station(s), the types of testing performed, the frequency and/or duration of any testing or monitoring, as appropriate, and any other pertinent information about the evaluation process shall be contained in this summary.

18. DURATION AND CONDITIONS OF CERTIFICATION

Vapor recovery system certifications shall specify the duration and conditions of certification.

18.1 Duration of System Certification

Vapor recovery systems shall be certified for a period of four years. The certification Executive Order shall specify the date on which the certification shall expire if it is not reissued.

Alvarez v. Chevron Corp., No. 09-56698 archived on September 9, 2011

18.2 Duration of Component Certification

Certification of a system shall include all components, and the expiration date of the certification shall apply to all system-specific components used on the system. For example, if the system is certified with nozzle A, the expiration date for nozzle A with that system will be the expiration date of the Executive Order that certifies the system.

18.3 Performance Monitoring

During the certification period, any significant deficiencies identified, through periodic equipment audits, complaint investigations, certification or compliance tests, etc., shall be noted in the performance file and brought to the attention of the equipment manufacturer.

18.4 Modification of Expiration Date

Modification of the certification for the purpose of adding system-specific components may establish a new expiration date for the system, providing the following conditions are met.

18.4.1 There are no significant outstanding problems that have not been resolved.

18.4.2 The system was subjected to, and passed, the operational and efficiency testing required for a new system.

18.4.3 The expiration date for system-specific components that were not tested is not changed.

18.4.4 For example, the system that was certified with nozzle A is tested with nozzle B. The system with nozzle A can be referred to as sub-system A, and the system with nozzle B can be referred to as sub-system B. Upon successful completion of all the required testing, sub-system B may be certified for a period of time not to exceed four years, and the expiration date will be established. This will not, however, change the expiration date for sub-system A. The Table below indicates the appropriate CARB actions with regard to certifications that are expiring.

Table 18-1

CARB Actions Regarding Expiring Certifications

Case	Recertification Requested?	Unresolved Problems?	Time Until Expiration	CARB Action
1	Yes	No	1 year	Letter of Intent to Recertify
	Yes	No	6 months	Draft EO for Review
	Yes	No	4 months	Revised Draft EO for Review
	Yes	No	1 month	Issue EO
2	No	Yes	1 year	Notification of Impending Expiration
	No	Yes	Expired	Notification of Expiration
3	Yes	Yes	Anytime	Notify Certification Holder
	Yes	Yes	1 year	Notification of Impending Expiration (except if Case 3a)
3a	Yes	Yes	1 year	Resolution Likely, Time Insufficient Extend Certification for 1 year max

Alvarez v. Chevron Corp., No. 09-56698 archived on September 9, 2011

19. CERTIFICATIONS THAT HAVE BEEN TERMINATED

This section applies to systems for which the certification was terminated. Systems that were installed as of the operative date of a new standard, or that are otherwise subject to Health & Safety Code section 41956.1, may remain in use for the remainder of their useful life or for up to four years after the effective date of the new standard, whichever is shorter, provided they comply with all of the specifications of this section. All components and parts of the system shall be subject to the requirements of paragraph 19.1. Systems whose certifications have terminated shall be permitted to be installed as provided in paragraph 19.2.

19.1 Replacement of Components or Parts of a System with a Terminated Certification

19.1.1 Components and replacement parts meeting the currently and prospectively operative performance standards or specifications may be certified for use with the no-longer-certified system for the remainder of the allowable in-use period of the system.

19.1.2 A component or replacement part not meeting the currently operative performance standards or specifications, but which was certified for use with the system prior to the termination of the certification, shall be used as a replacement only if no compatible component or part that meets the new standards or specifications has been certified as a replacement and are commercially available. The certification of the component or part shall terminate at the end of the allowable in-use period for the system unless otherwise specified in the certification of the replacement component or part.

19.1.3 A component or part that was not certified for use with the system prior to the termination of certification, and that does not meet all of the currently operative standards or specifications, may be certified as a replacement part or component for use on the system provided that there are no other commercially available certified parts meeting the most current performance standards or specifications.

Alvarez v. Chevron Corp., No. 09-56698 archived on September 9, 2011

19.1.4 When a certified, compatible component or replacement part that meets the operative standards or specifications becomes commercially available, only that component or part shall be installed. This shall not require the replacement of already-installed equipment prior to the end of the useful life of that part or component. Components or parts installed at the time the system reaches the end of the allowable in-use period for the system, may no longer be used even if the end of their useful life has not been reached.

19.1.5 Non-unihose configuration dispensers installed before April 1, 2003, may remain in use for the remainder of the useful life and may be replaced with non-unihose configuration dispensers as prescribed in section 4.11.

19.2 Installation of Systems with Terminated Certifications

19.2.1 When the Executive Officer determines that a certified Phase I or II system that meets the applicable operative performance standards and specifications by operative dates specified in Table 2-1 of CP-201 is not commercially available, the Executive Officer may change the operative and effective dates of new performance standards and specifications by renewing the certification for any system whose certification has been terminated provided that:

(a) Renewal preference shall be given to systems that are certified as being ORVR compatible, and

(b) The renewal shall be valid for a period to be determined by the Executive Officer with a maximum renewal period of six months.

19.2.2 Renewed certifications shall be posted on the CARB's Internet site. Systems whose certifications are posted as renewed certifications are permitted to be installed upon the Executive Officer's finding that a certified system is not commercially available.

Alvarez v. Chevron Corp., No. 09-56698 archived on September 9, 2011